YAMAHA

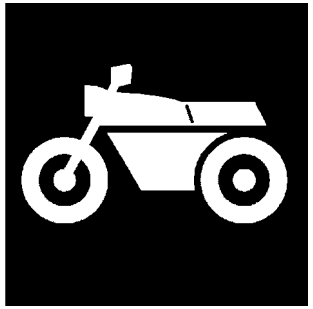

PARTS CATALOGUE

WR450FH (2GC7) CANADA
WR450F (2GC8) EUROPE
WR450FH (2GC9) OCEANIA
WR450F (2GC9) SOUTH AFRICA

YAMAHA
GENUINE
Parts & Accessories

1S2GC-100E1

( )

WR450FH/WR450F
PARTS CATALOGUE
©2016 by Yamaha Motor Co., Ltd.
1st edition, June 2016
All rights reserved.
Any reprinting or unauthorized use
without the written permission of
Yamaha Motor Co., Ltd.
is expressly prohibited.
Printed in Japan.

FOREWORD

This Parts Catalogue is related to the parts for the model(s) on the cover page. When you are ordering replacement parts, please refer to this Parts Catalogue and quote both part numbers and part names correctly.

1. Modifications or additions which have been made after the issue of the Parts Catalogue will be announced in the Parts News.
   It is advisable that you make the necessary corrections to the Parts Catalogue according to the Parts News.

2. Abbreviations
   The following abbreviations are used in this Parts Catalogue.

   “UR” Use specified parts number.

   “UN” Use as many as needed.

   “AP” Alternate Parts

   “LM” Locally Made (Parts need to be ordered locally)

   “F#” Frame No. (Applicable machine No.)

   “O/S” Over Size

3. The number of components for assembly
   - Parts, which are to be supplied in an assembly, are listed with a dot (.) in front of the part name as shown below.
   - The numeral appearing to the right of each component part indicates the quantity of parts for each assembly unit.

PART NO.	DESCRIPTION	Q’TY	REMARKS
2F5–83310–60	FRONT FLASHER LIGHT ASSY	2	
115–83311–60	.BULB (6V–18W)	1	

4. Applicable colours of graphics are represented in the “REMARKS” as shown below.

PART NO.	DESCRIPTION	Q’TY	REMARKS
2N4–24110–00–X5	FUEL TANK COMP.	2	MXR
3J1–24240–10	.GRAPHIC, FUEL TANK	1	FOR MXR

5. Note that the illustrations for reference in finding parts numbers are not to be used for assembling. When assembling, please use the applicable service manual.

6. The asterisk (*) before a reference number indicates modified items after the first edition.

7. Applicable Serial No.

Engine Serial No.

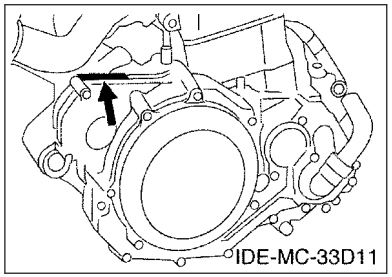

Frame Serial No.

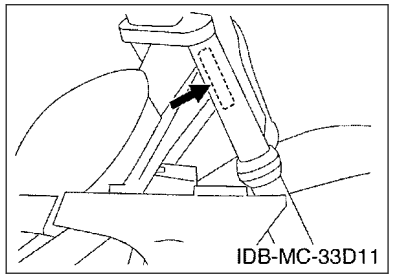

8. Applicable Colour Code (The (*) mark shows Model colour.)

Abbreviation	Colour Name	Colour Code
DPBSE(*)	DEEP PURPLISH BLUE SOLID E	0583

CONTENTS

ENGINE

CYLINDER....1
CRANKSHAFT & PISTON....3
VALVE....4
CAMSHAFT & CHAIN....6
WATER PUMP....7
RADIATOR & HOSE....8
OIL PUMP....9
OIL CLEANER....10
INTAKE....11
INTAKE 2....13
AIR INDUCTION SYSTEM....14
EXHAUST....15
CRANKCASE....17
CRANKCASE COVER 1....19
STARTER....21
STARTER CLUTCH....22
CLUTCH....23
TRANSMISSION....24
SHIFT CAM & FORK....26
SHIFT SHAFT....27

CHASSIS

FRAME....28
FENDER....31
SIDE COVER....32
REAR ARM....34
REAR SUSPENSION....36
STEERING....37
FRONT FORK....38
FUEL TANK....41
SEAT....43
FRONT WHEEL....44
FRONT BRAKE CALIPER....45
REAR WHEEL....46
REAR BRAKE CALIPER....48
STEERING HANDLE & CABLE....49
FRONT MASTER CYLINDER....50
STAND & FOOTREST....51
REAR MASTER CYLINDER....52
GENERATOR....53
STARTING MOTOR....54
METER....55
HEADLIGHT....56
TAILLIGHT....57
HANDLE SWITCH & LEVER....58
ELECTRICAL 1....59
ELECTRICAL 2....60
ALTERNATE FOR CHASSIS....62

INDEX

NUMERICAL INDEX....63

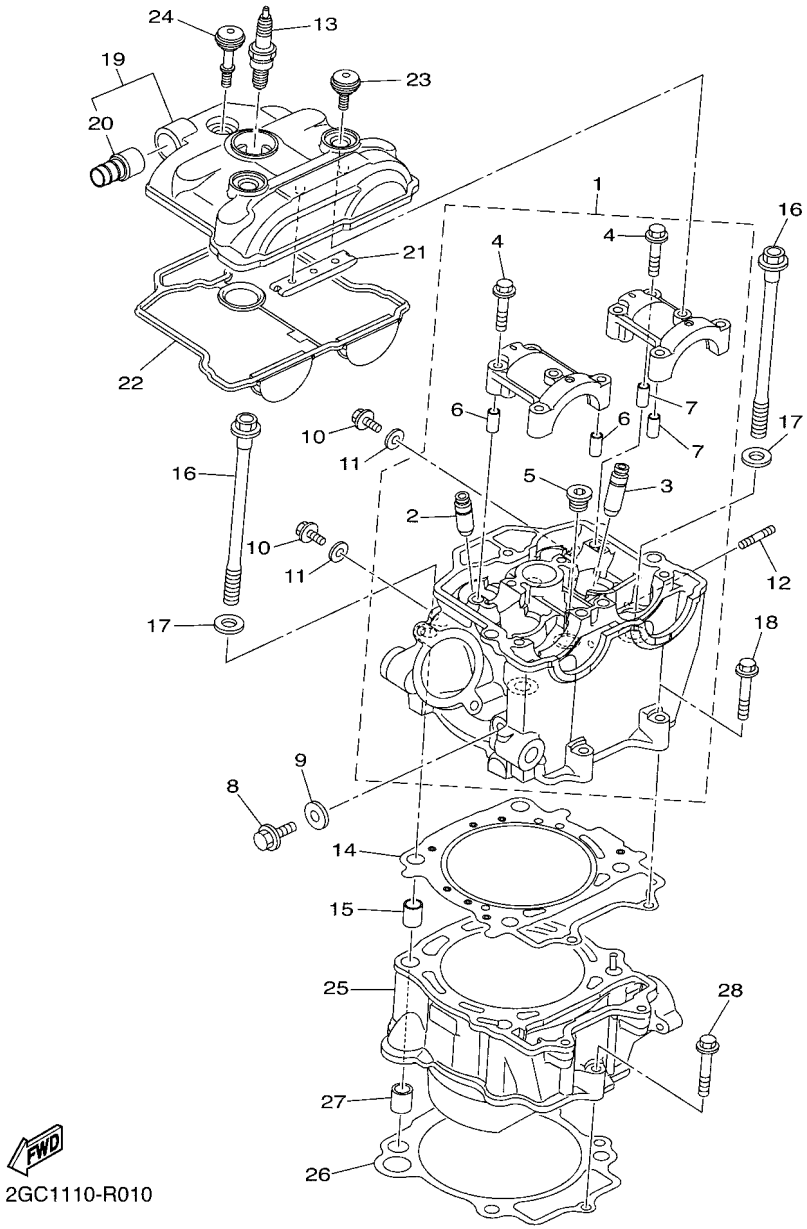

FIG. 1 CYLINDER

REF. NO.	PART NO.	DESCRIPTION	2GC7	2GC8	2GC9			REMARKS
1	1SL–11102–00	CYLINDER HEAD ASSY	1	1	1			
2	5PS–11133–10	.GUIDE, VALVE 1	2	2	2			
3	5PS–11134–10	.GUIDE, VALVE 2	2	2	2			
4	90105–06027	.BOLT, FLANGE	8	8	8			
5	90340–12007	.PLUG, STRAIGHT SCREW	1	1	1			
6	91808–16023	.PIN, DOWEL	2	2	2			
7	91808–16023	.PIN, DOWEL	2	2	2			
8	95022–08012	BOLT, FLANGE	1	1	1			
9	90430–08119	GASKET	1	1	1			
10	95022–06010	BOLT, FLANGE	2	2	2			
11	90430–06014	GASKET	2	2	2			
12	90116–06037	BOLT, STUD	3	3	3			
13	94701–00411	PLUG, SPARK (NGK R CR8E)	1	1	1			STD
	94701–00410	PLUG, SPARK (NGK R CR9E)	1	1	1			AP
14	33D–11181–00	GASKET, CYLINDER HEAD 1	1	1	1			
15	93612–16254	PIN, DOWEL	2	2	2			
16	90105–10367	BOLT, FLANGE	4	4	4			
17	90201–10025	WASHER, PLATE	4	4	4			
18	95022–06035	BOLT, FLANGE	2	2	2			
19	33D–11190–39	COVER, CYLINDER HEAD 1	1	1	1			
20	2GC–1117J–10	.PIPE, 7	1	1	1			
21	5BE–12241–00	GUIDE, STOPPER 2	1	1	1			
22	33D–11193–01	GASKET, HEAD COVER 1	1	1	1			
23	5UM–1119E–00	BOLT, COVER HEAD	2	2	2			
24	33D–1119E–00	BOLT, COVER HEAD	1	1	1			
25	1SL–11311–00	CYLINDER 1	1	1	1			
26	1SL–11351–00	GASKET, CYLINDER	1	1	1			

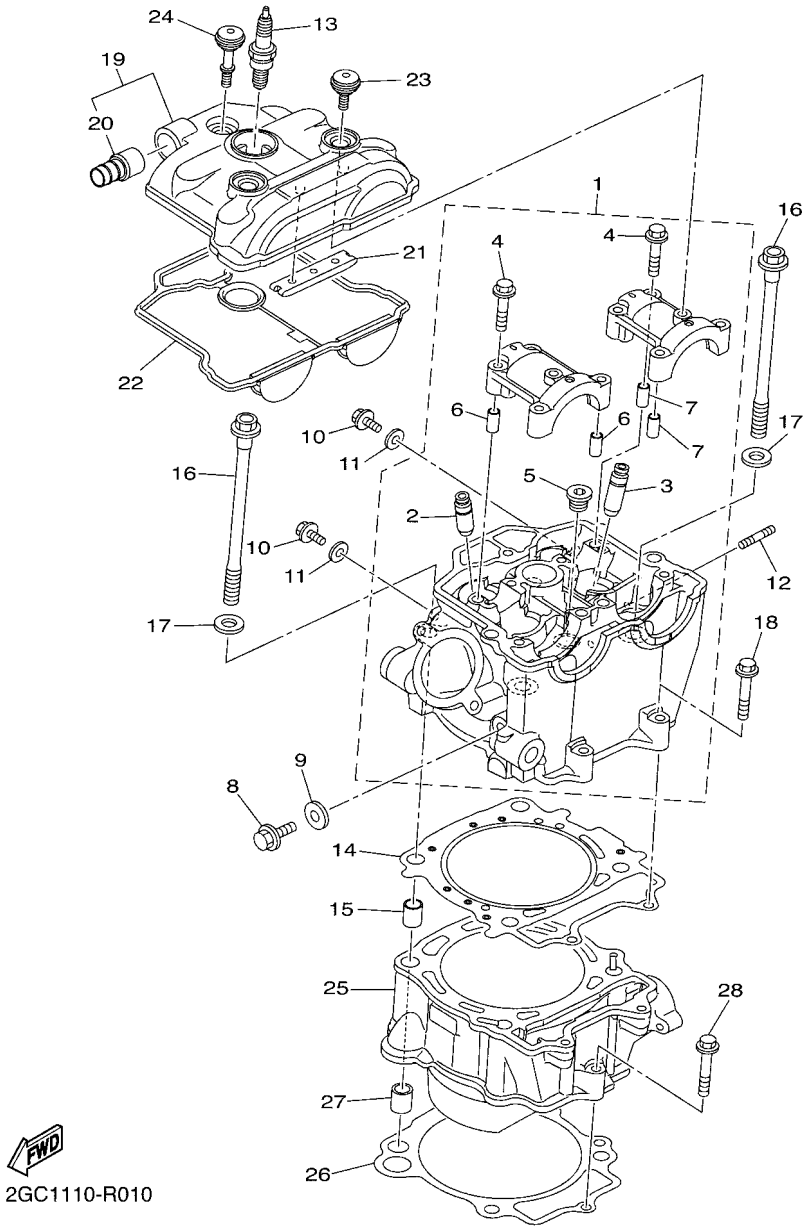

FIG. 1 CYLINDER

REF. NO.	PART NO.	DESCRIPTION	2GC7	2GC8	2GC9			REMARKS
27	99530–14016	PIN, DOWEL	2	2	2			
28	95022–06035	BOLT, FLANGE	1	1	1			

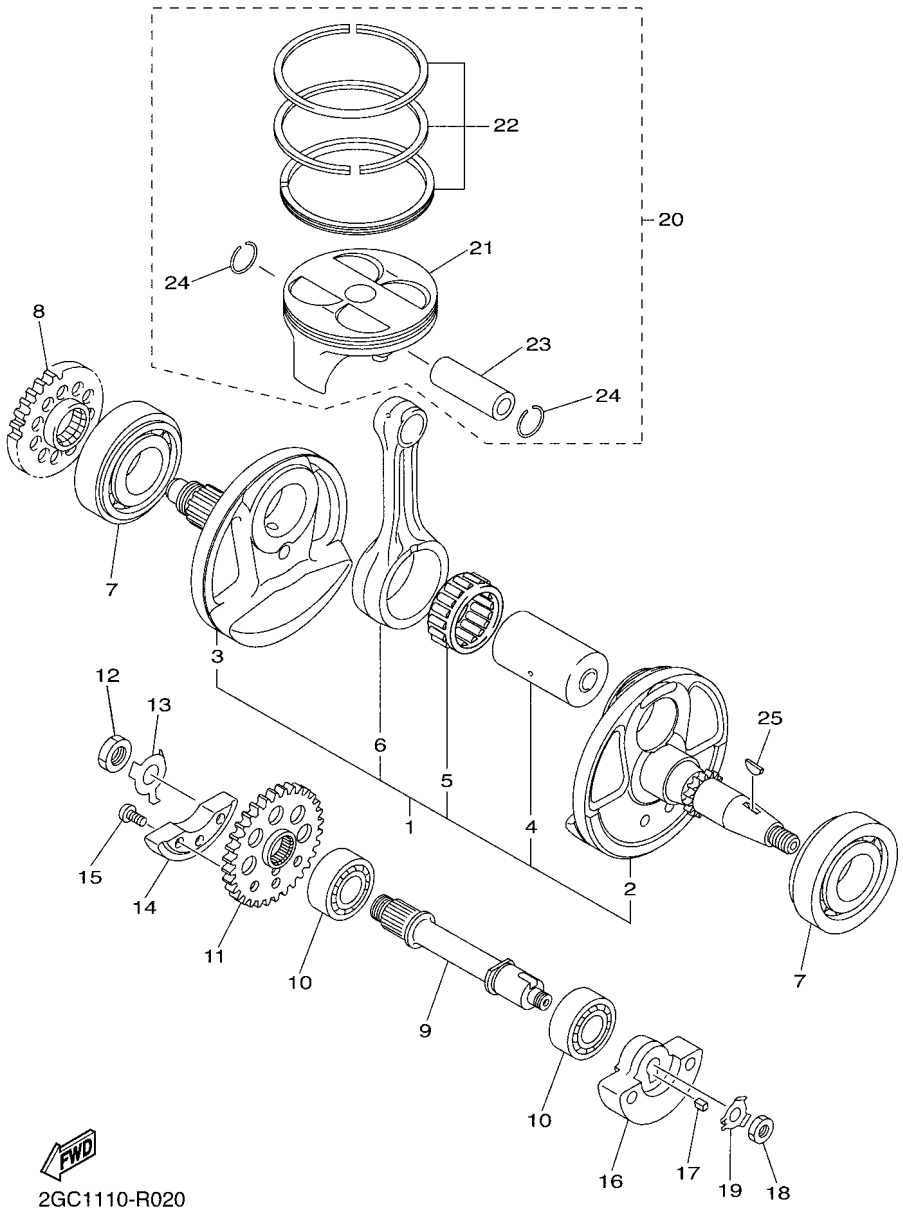

FIG. 2 CRANKSHAFT & PISTON

REF. NO.	PART NO.	DESCRIPTION	2GC7	2GC8	2GC9			REMARKS
1	2GC–11400–00	CRANKSHAFT ASSY	1	1	1			
2	2GC–11412–00	.CRANK 1	1	1	1			
3	2GC–11422–00	.CRANK 2	1	1	1			
4	5TG–11681–01	.PIN, CRANK 1	1	1	1			
5	93310–63458	.BEARING	1	1	1			
6	33D–11651–03	.ROD, CONNECTING	1	1	1			
7	93306–30633	BEARING	2	2	2			
8	1SL–11536–00	GEAR, DRIVE	1	1	1			
9	33D–11455–00	SHAFT 1	1	1	1			
10	93304–20310	BEARING	2	2	2			
11	2S2–11531–00	GEAR, BALANCE WEIGHT	1	1	1			
12	90170–14171	NUT	1	1	1			
13	90215–14287	WASHER, LOCK	1	1	1			
14	2GC–11454–00	WEIGHT 1	1	1	1			
15	90110–06168	BOLT, HEXAGON SOCKET HEAD	3	3	3			
16	2S2–11464–00	WEIGHT 2	1	1	1			
17	90282–05034	KEY, STRAIGHT	1	1	1			
18	90170–10405	NUT	1	1	1			
19	90215–10009	WASHER, LOCK	1	1	1			
20	1SL–116A0–00	PISTON ASSY	1	1	1			
21	1SL–11631–00	.PISTON (STD)	1	1	1			
22	33D–11603–00	.PISTON RING SET (STD)	1	1	1			
23	33D–11633–00	.PIN, PISTON	1	1	1			
24	93450–19052	.CIRCLIP	2	2	2			
25	90280–03006	KEY, WOODRUFF	1	1	1			

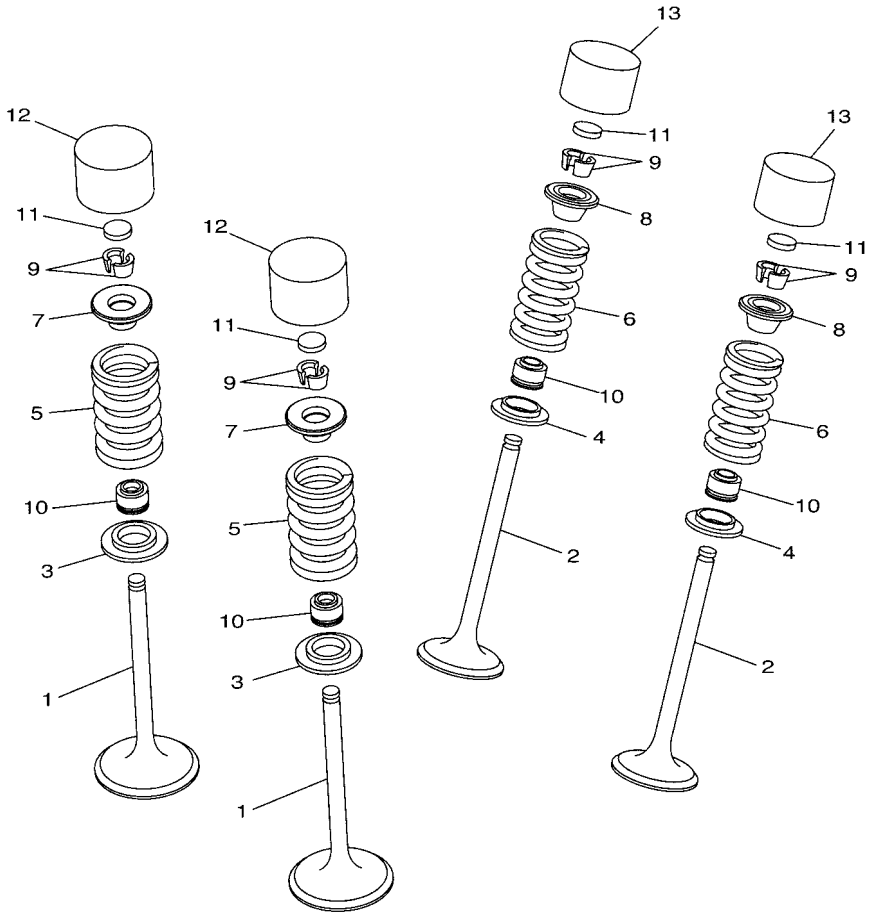

33D1110-J030

FIG. 3 VALVE

REF. NO.	PART NO.	DESCRIPTION	2GC7	2GC8	2GC9			REMARKS
1	1SL–12111–00	VALVE, INTAKE	2	2	2			
2	1SL–12121–00	VALVE, EXHAUST	2	2	2			
3	33D–12116–00	SEAT, VALVE SPRING	2	2	2			
4	33D–12126–00	SEAT, VALVE SPRING 2	2	2	2			
5	33D–12113–00	SPRING, VALVE INNER	2	2	2			
6	B11–12114–00	SPRING, VALVE OUTER	2	2	2			
7	33D–12117–00	RETAINER, VALVE SPRING	2	2	2			
8	3LD–12117–00	RETAINER, VALVE SPRING	2	2	2			
9	3LD–12118–00	LOCK, VALVE SPRING RETAINER	8	8	8			
10	51Y–12119–00	SEAL, VALVE STEM	4	4	4			
11	3LD–12168–00	PAD, ADJUSTING (1.20)	4	4	4			UR
	3LD–12168–20	PAD, ADJUSTING (1.25)	4	4	4			UR
	3LD–12168–40	PAD, ADJUSTING (1.30)	4	4	4			UR
	3LD–12168–60	PAD, ADJUSTING (1.35)	4	4	4			UR
	3LD–12168–80	PAD, ADJUSTING (1.40)	4	4	4			UR
	3LD–12168–A0	PAD, ADJUSTING (1.45)	4	4	4			UR
	3LD–12168–F0	PAD, ADJUSTING (1.50)	4	4	4			UR
	3LD–12168–H1	PAD, ADJUSTING (1.55)	4	4	4			UR
	3LD–12168–K1	PAD, ADJUSTING (1.60)	4	4	4			UR
	3LD–12168–M1	PAD, ADJUSTING (1.65)	4	4	4			UR
	3LD–12168–R1	PAD, ADJUSTING (1.70)	4	4	4			UR
	3LD–12168–U1	PAD, ADJUSTING (1.75)	4	4	4			UR
	3LD–12168–W1	PAD, ADJUSTING (1.80)	4	4	4			UR
	3LD–12168–Y1	PAD, ADJUSTING (1.85)	4	4	4			UR
	3LD–12169–11	PAD, ADJUSTING (1.90)	4	4	4			UR
	3LD–12169–31	PAD, ADJUSTING (1.95)	4	4	4			UR
	3LD–12169–50	PAD, ADJUSTING (2.00)	4	4	4			UR

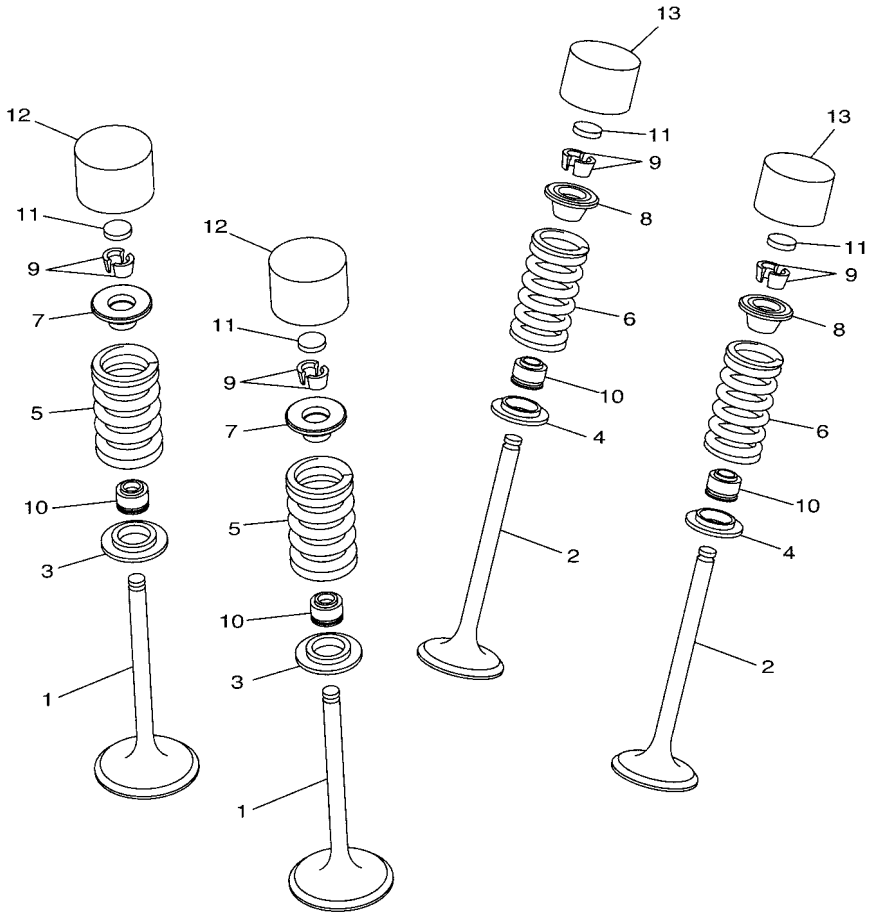

FWD

33D1110-J030

FIG. 3 VALVE

REF. NO.	PART NO.	DESCRIPTION	2GC7	2GC8	2GC9			REMARKS
11	3LD–12169–70	PAD, ADJUSTING (2.05)	4	4	4			UR
	3LD–12169–90	PAD, ADJUSTING (2.10)	4	4	4			UR
	3LD–12169–E0	PAD, ADJUSTING (2.15)	4	4	4			UR
	3LD–12169–G0	PAD, ADJUSTING (2.20)	4	4	4			UR
	3LD–12169–J0	PAD, ADJUSTING (2.25)	4	4	4			UR
	3LD–12169–L0	PAD, ADJUSTING (2.30)	4	4	4			UR
	3LD–12169–N0	PAD, ADJUSTING (2.35)	4	4	4			UR
	3LD–12169–T0	PAD, ADJUSTING (2.40)	4	4	4			UR
12	4C8–12153–10	LIFTER, VALVE	2	2	2			STD YELLOW
	4C8–12153–09	LIFTER, VALVE (O/S)	2	2	2			AP GREEN
13	5EB–12153–10	LIFTER, VALVE	2	2	2			STD YELLOW
	5EB–12153–09	LIFTER, VALVE (O/S)	2	2	2			AP GREEN

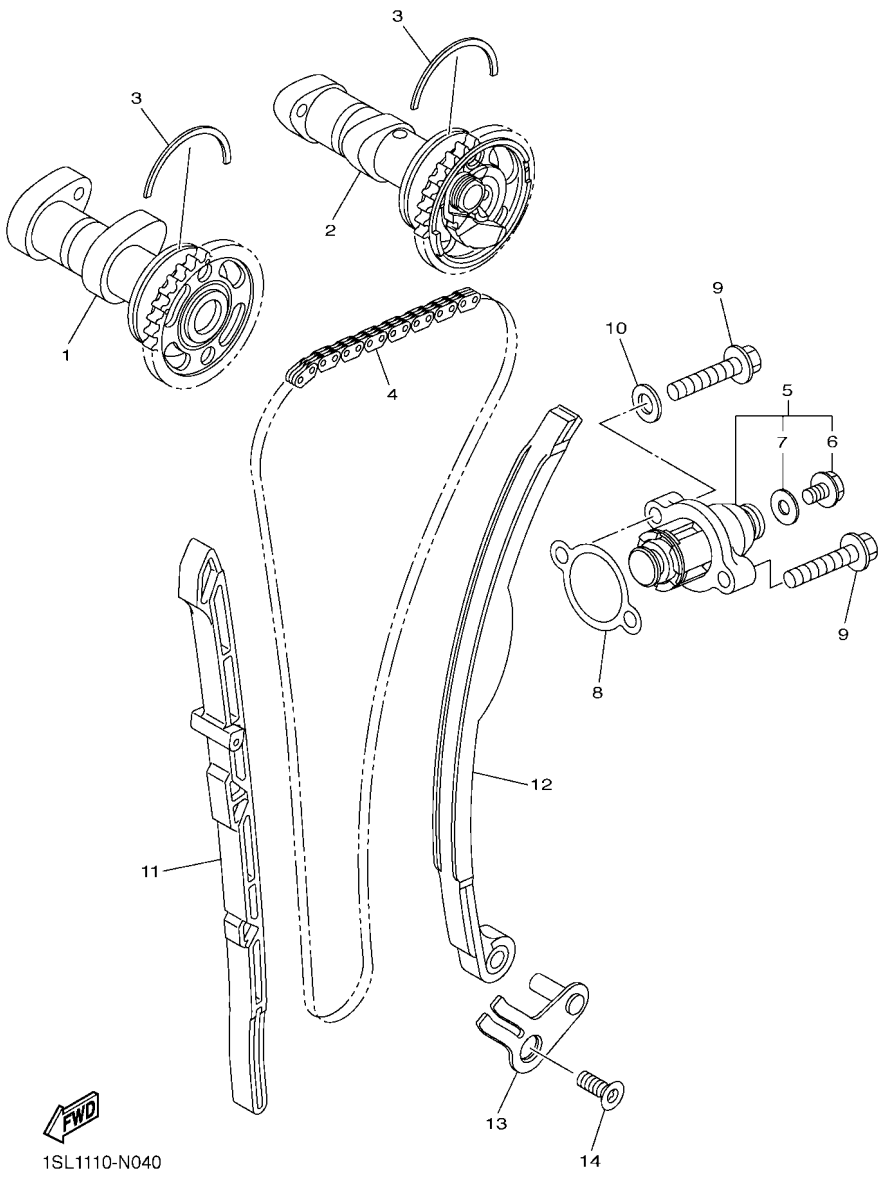

FIG. 4 CAMSHAFT & CHAIN

REF. NO.	PART NO.	DESCRIPTION	2GC7	2GC8	2GC9			REMARKS
1	2GC–12170–00	CAMSHAFT ASSY 1	1	1	1			
2	2GC–12180–00	CAMSHAFT ASSY 2	1	1	1			
3	93440–41178	CIRCLIP	2	2	2			
4	94591–57122	CHAIN	1	1	1			
5	5TA–12210–30	TENSIONER ASSY, CAM CHAIN	1	1	1			
6	5EL–12228–00	.BOLT	1	1	1			
7	5EL–12214–00	.GASKET	1	1	1			
8	4FM–12213–00	GASKET, TENSIONER CASE	1	1	1			
9	90105–06148	BOLT, FLANGE	2	2	2			
10	90430–06014	GASKET	1	1	1			
11	33D–12251–00	DAMPER, CHAIN 1	1	1	1			
12	33D–12252–00	DAMPER, CHAIN 2	1	1	1			
13	1SL–12233–00	PLATE, GUIDE STOPPER 1	1	1	1			
14	90151–06024	SCREW, COUNTERSUNK	1	1	1			

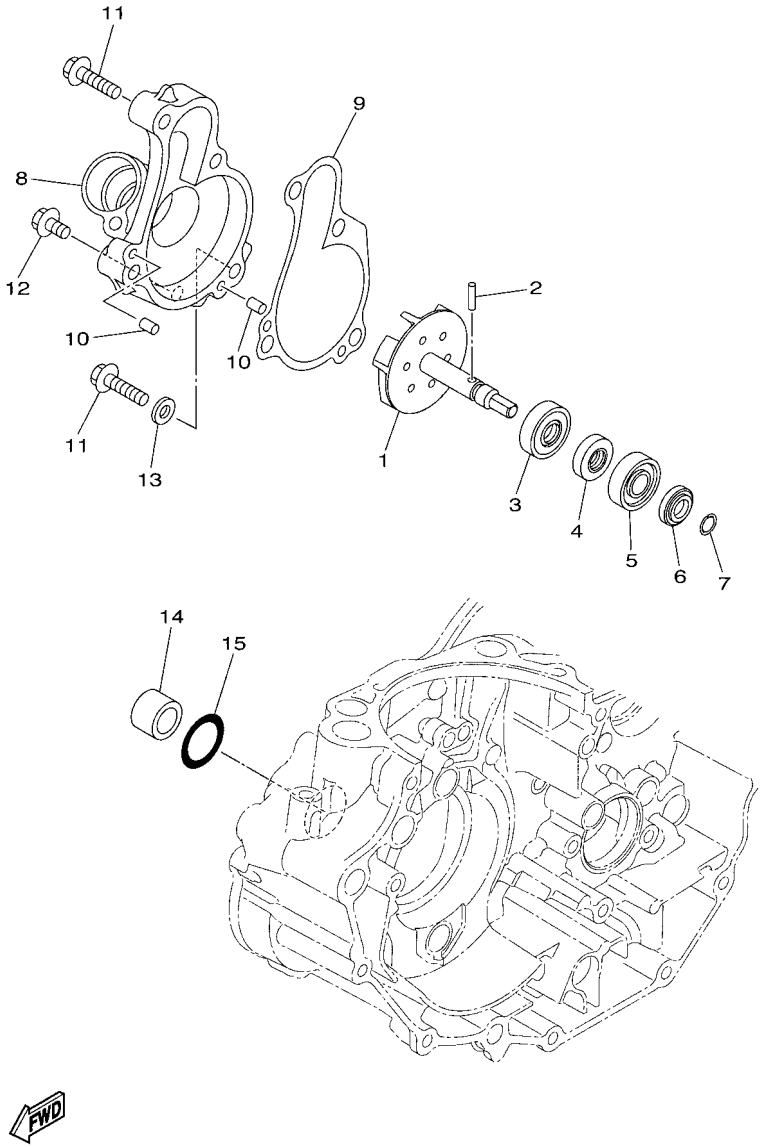

2GC1110-R050

FIG. 5 WATER PUMP

REF. NO.	PART NO.	DESCRIPTION	2GC7	2GC8	2GC9			REMARKS
1	1SL–12450–01	IMPELLER SHAFT ASSY	1	1	1			
2	93603–12030	PIN, DOWEL	1	1	1			
3	93102–08004	OIL SEAL	1	1	1			
4	93102–08307	OIL SEAL	1	1	1			
5	93300–60801	BEARING	1	1	1			KOYO
6	1SL–11917–00	COLLAR	1	1	1			
7	93440–07182	CIRCLIP	1	1	1			
8	33D–12422–00	COVER, HOUSING	1	1	1			
9	33D–12427–00	GASKET, HOUSING COVER 1	1	1	1			
10	93604–10011	PIN, DOWEL	2	2	2			
11	95022–06025	BOLT, FLANGE	4	4	4			
12	95022–06010	BOLT, FLANGE	1	1	1			
13	90430–06014	GASKET	1	1	1			
14	5BE–12564–00	PIPE, WATER	1	1	1			
15	93210–19758	O-RING	1	1	1			

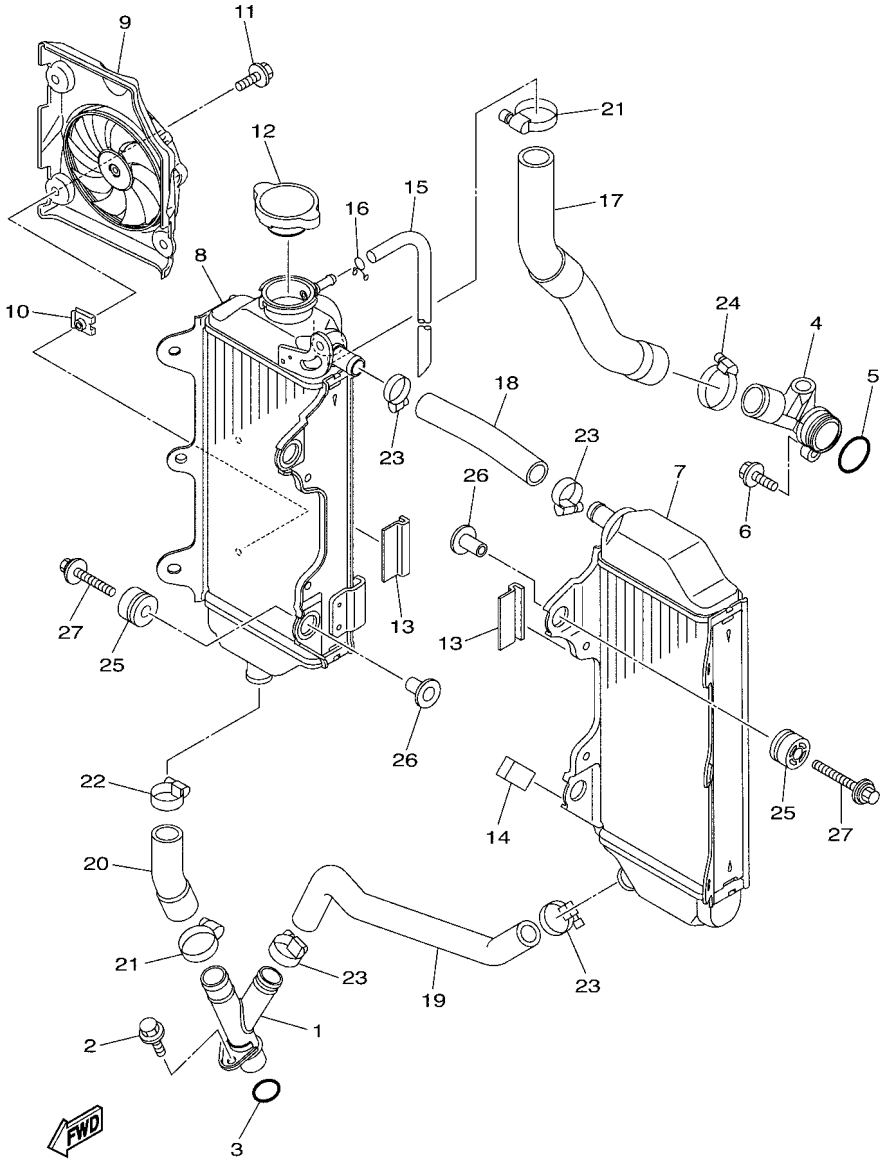

2GC1110-R060

FIG. 6 RADIATOR & HOSE

REF. NO.	PART NO.	DESCRIPTION	2GC7	2GC8	2GC9			REMARKS
1	2GC–12482–00	PIPE 2	1	1	1			
2	95022–06012	BOLT, FLANGE	1	1	1			
3	93210–16500	O-RING	1	1	1			
4	1SL–12446–00	JOINT	1	1	1			
5	93210–24253	O-RING	1	1	1			
6	95022–06020	BOLT, FLANGE	1	1	1			
7	2GC–1240A–00	RADIATOR ASSY	1	1	1			
8	2GC–12461–00	RADIATOR COMP	1	1	1			
9	2GB–12405–00	BLOWER ASSY	1	1	1			
10	5SL–12671–00	NUT 1	3	3	3			
11	2GB–12615–00	BOLT	3	3	3			
12	5SL–12462–00	CAP, RADIATOR	1	1	1			
13	33D–12465–00	DAMPER, RADIATOR	2	2	2			
14	5YT–24665–00	DAMPER	1	1	1			
15	91A20–05065	TUBE, FLEXIBLE VINYL	1	1	1			
16	90467–090A2	CLIP	1	1	1			
17	2GC–12576–00	HOSE 1	1	1	1			
18	1SL–12577–00	HOSE 2	1	1	1			
19	2GC–12578–00	HOSE 3	1	1	1			
20	1SL–12579–00	HOSE 4	1	1	1			
21	90450–28001	HOSE CLAMP ASSY	2	2	2			
22	90450–25001	HOSE CLAMP ASSY	1	1	1			
23	90450–22001	HOSE CLAMP ASSY	4	4	4			
24	90450–32003	HOSE CLAMP ASSY	1	1	1			
25	90480–15012	GROMMET	4	4	4			
26	90387–06065	COLLAR	4	4	4			
27	90119–06262	BOLT, WITH WASHER	4	4	4			

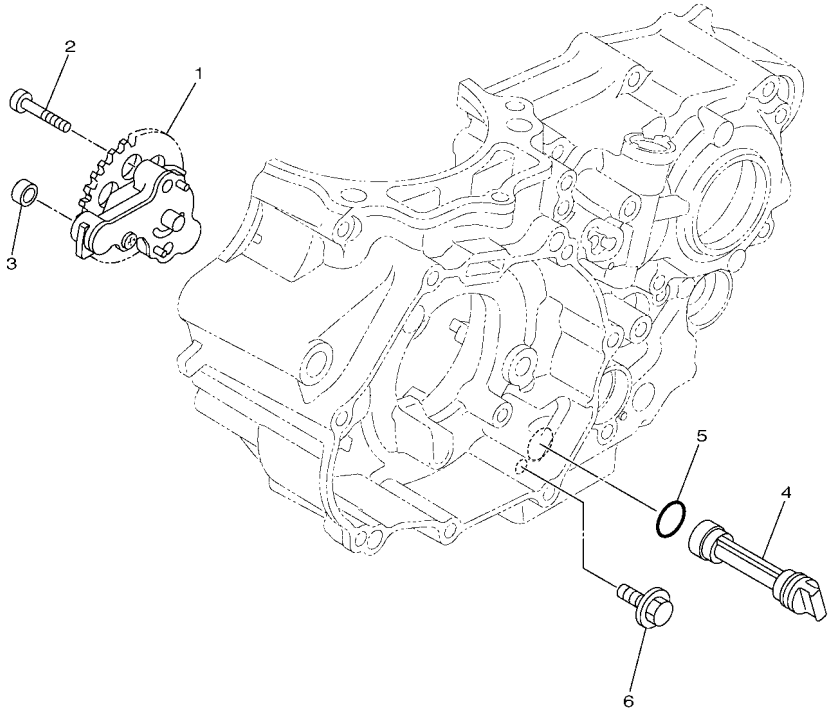

1SL1110-N070

FIG. 7 OIL PUMP

REF. NO.	PART NO.	DESCRIPTION	2GC7	2GC8	2GC9			REMARKS
1	1SL–13300–00	OIL PUMP ASSY	1	1	1			
2	90110–05033	BOLT, HEXAGON SOCKET HEAD	2	2	2			
3	90430–06156	GASKET	1	1	1			
4	1SL–13411–10	STRAINER, OIL	1	1	1			
5	93210–12010	O-RING	1	1	1			
6	90159–06021	SCREW, WITH WASHER	1	1	1			

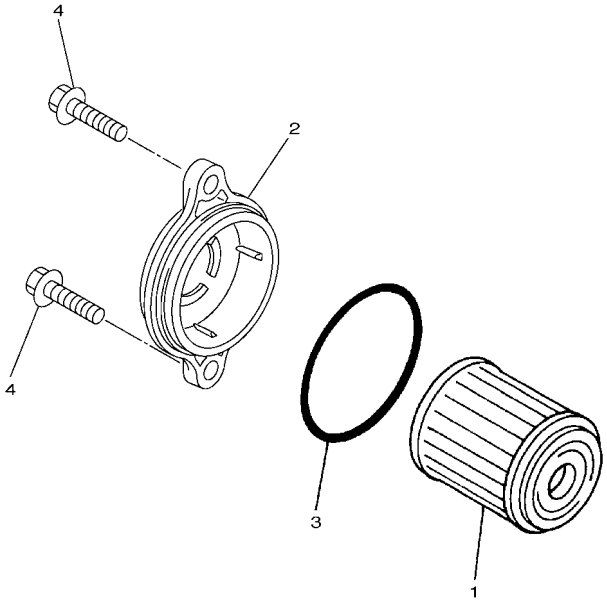

1SL1110-N080

FIG. 8 OIL CLEANER

REF. NO.	PART NO.	DESCRIPTION	2GC7	2GC8	2GC9			REMARKS
1	5D3–13440–02	ELEMENT ASSY, OIL CLEANER	1	1	1			
2	1SL–13447–00	COVER, OIL ELEMENT	1	1	1			
3	93210–45708	O-RING	1	1	1			
4	95022–06016	BOLT, FLANGE	2	2	2			

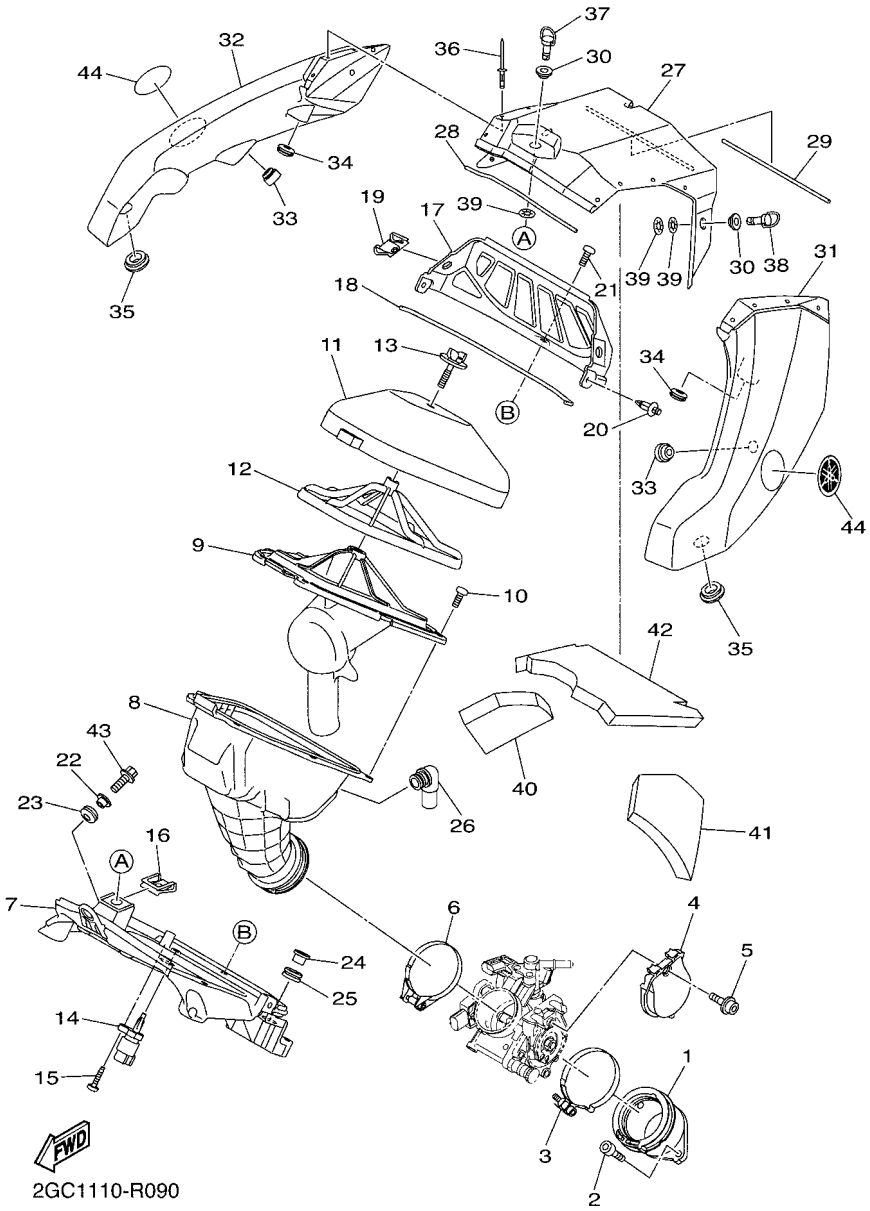

FIG. 9 INTAKE

REF. NO.	PART NO.	DESCRIPTION	2GC7	2GC8	2GC9			REMARKS
1	33D–13597–10	JOINT, CARBURETOR 3	1	1	1			
2	91312–06020	BOLT	2	2	2			
3	90450–60004	HOSE CLAMP ASSY	1	1	1			
4	1SL–14293–00	COVER 1	1	1	1			
5	90110–05066	BOLT, HEXAGON SOCKET HEAD	1	1	1			
6	90450–58007	HOSE CLAMP ASSY	1	1	1			
7	1SL–14411–00	CASE, AIR CLEANER 1	1	1	1			
8	2GC–14453–00	JOINT, AIR CLEANER 1	1	1	1			
9	2GB–14459–00	HOLDER, GUIDE	1	1	1			
10	98502–05014	SCREW, PAN HEAD	8	8	8			
11	1SL–14451–00	ELEMENT, AIR CLEANER	1	1	1			
12	1SL–14458–00	GUIDE	1	1	1			
13	1SL–14428–00	BOLT	1	1	1			
14	8FP–85886–00	SENSOR, AIR TEMPERATURE	1	1	1			
15	97702–50520	SCREW, TAPPING	1	1	1			
16	4XV–2177L–01	PLATE, SPRING	1	1	1			
17	1SL–14422–00	CAP, CLEANER CASE 2	1	1	1			
18	1SL–14462–00	SEAL	1	1	1			
19	4XV–2177L–01	PLATE, SPRING	2	2	2			
20	90269–06008	RIVET	2	2	2			
21	98502–05014	SCREW, PAN HEAD	1	1	1			
22	90387–087L0	COLLAR	1	1	1			
23	90480–12237	GROMMET	1	1	1			
24	1SL–14442–00	SPACER	2	2	2			
25	90480–01027	GROMMET	2	2	2			
26	5TJ–14419–00	PIPE	1	1	1			
27	1SL–14412–01	CAP, CLEANER CASE 1	1	1	1			

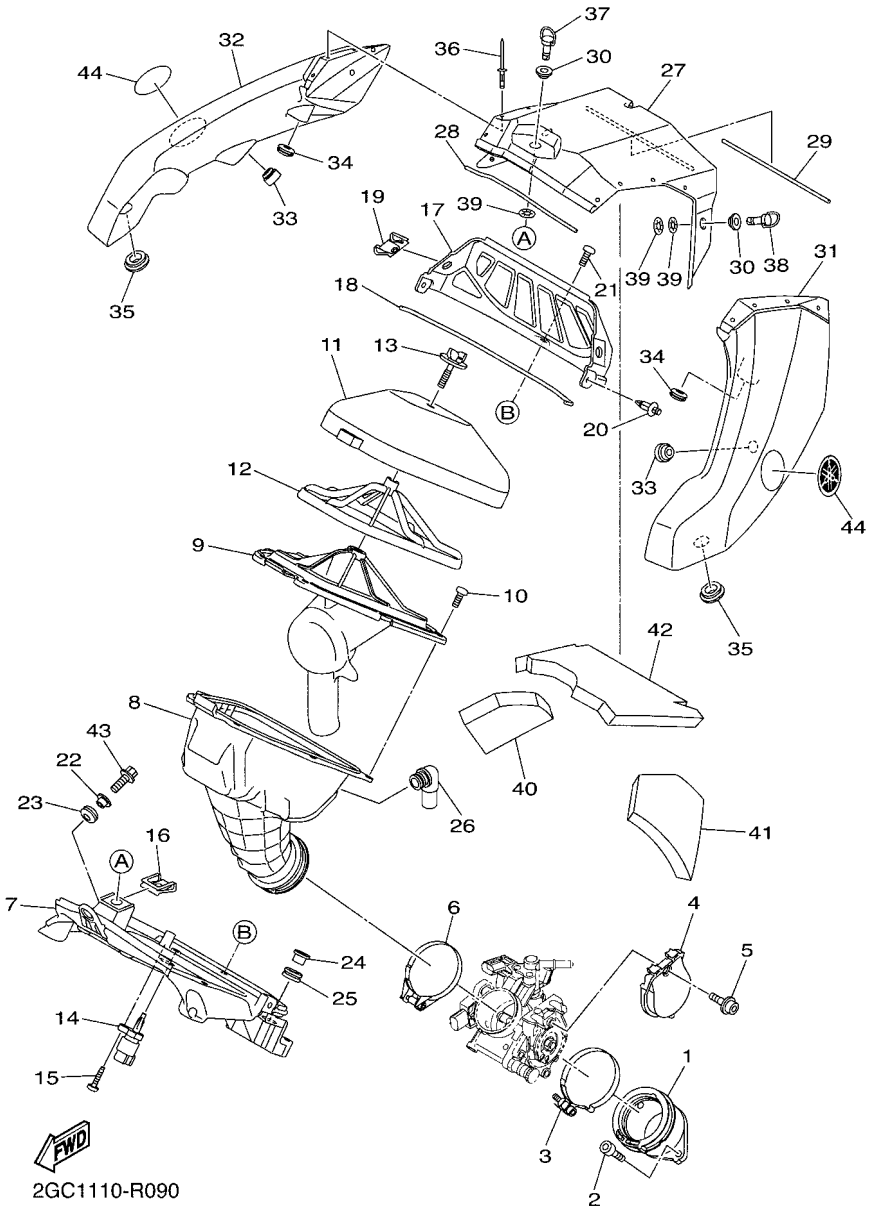

FIG. 9 INTAKE

REF. NO.	PART NO.	DESCRIPTION	2GC7	2GC8	2GC9			REMARKS
28	1SL–14452–00	SEAL	1	1	1			
29	1SL–14457–00	SEAL	1	1	1			
30	90387–07045	COLLAR	3	3	3			
31	1SL–14437–01	DUCT	1	1	1			
32	1SL–1443A–01	DUCT	1	1	1			
33	90480–11298	GROMMET	2	2	2			
34	90480–12237	GROMMET	2	2	2			
35	90480–01558	GROMMET	2	2	2			
36	90267–41004	RIVET, BLIND	12	12	12			
37	3FV–28386–00	HEAD	1	1	1			
38	1SL–28386–00	HEAD	2	2	2			
39	5TJ–21757–00	WASHER, SPECIAL 1	5	5	5			
40	2GB–14425–00	DAMPER 1	1	1	1			
41	2GB–14426–00	DAMPER 2	1	1	1			
42	2GB–1442G–00	DAMPER 3	1	1	1			
43	90105–06203	BOLT, FLANGE	3	3	3			
44	1SL–2175C–00	TUNING FORK MARK	2	2	2			

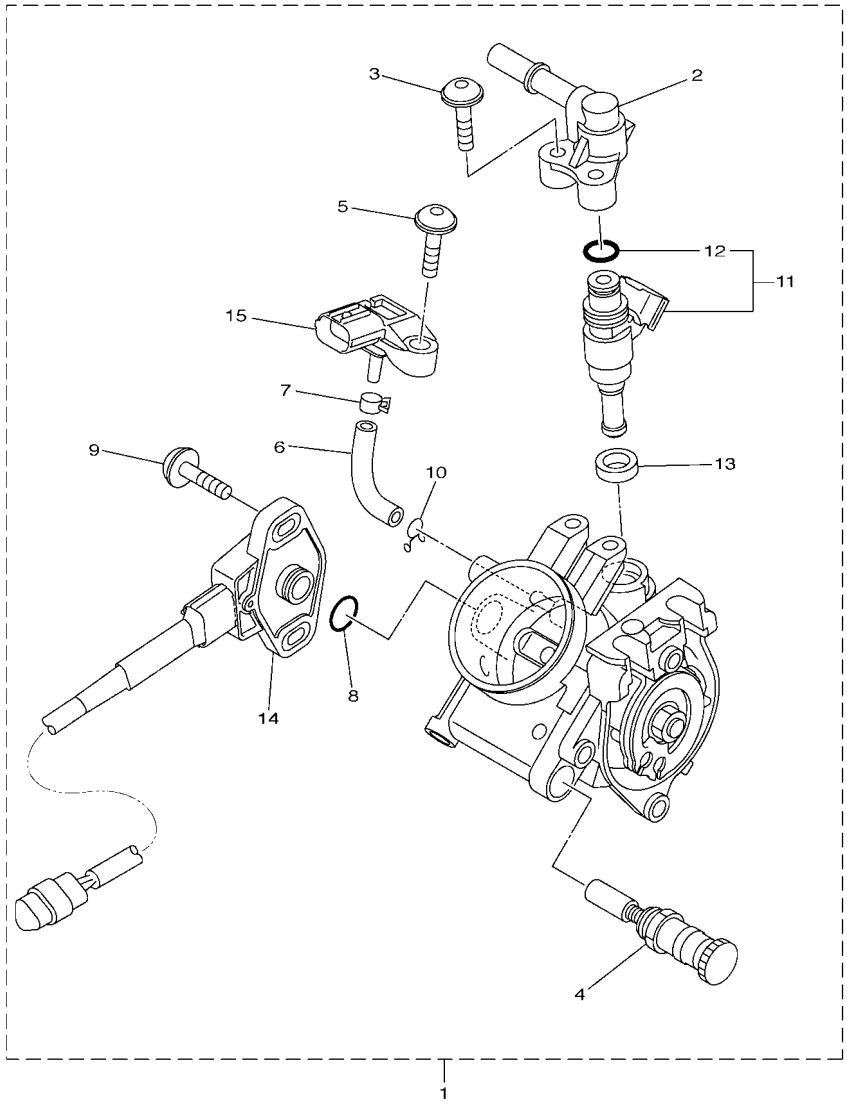

1SL1110-N100

FIG. 10 INTAKE 2

REF. NO.	PART NO.	DESCRIPTION	2GC7	2GC8	2GC9			REMARKS
1	2GC–13750–00	THROTTLE BODY ASSY	1	1	1			
2	33D–13938–00	.PIPE	1	1	1			
3	33D–14486–00	.SCREW, ROD	2	2	2			
4	1SL–14171–00	.PLUNGER, STARTER	1	1	1			
5	33D–14325–00	.SCREW, PAN HEAD	1	1	1			
6	33D–14348–00	.PIPE 1	1	1	1			
7	33D–13577–00	.CLIP	1	1	1			
8	1DX–14562–00	.O-RING	1	1	1			
9	1DX–14216–00	.SCREW	1	1	1			
10	3TJ–14137–40	.CLIP	1	1	1			
11	3B4–13761–00	.INJECTOR	1	1	1			
12	5PS–14147–00	..O-RING	1	1	1			
13	90430–09002	.GASKET	1	1	1			
14	1SL–85885–01	.THROTTLE SENSOR ASSY	1	1	1			
15	2C0–82380–00	.SENSOR, PRESSURE	1	1	1			

FIG. 11 AIR INDUCTION SYSTEM

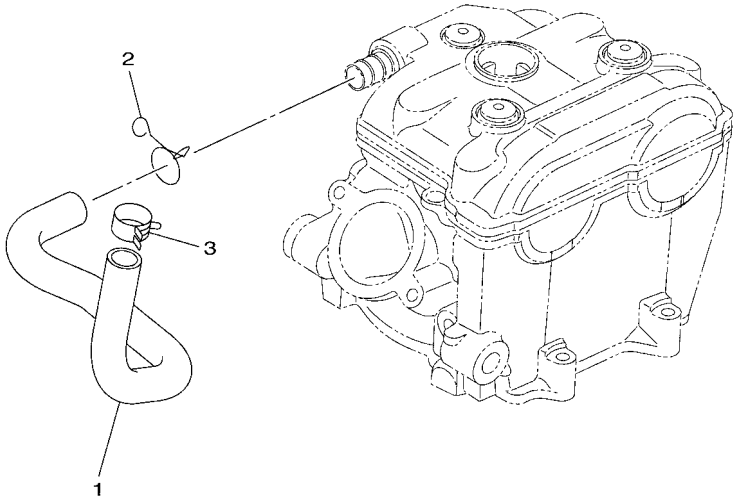

FWD

2GC1110-R110

REF. NO.	PART NO.	DESCRIPTION	2GC7	2GC8	2GC9			REMARKS
1	2GC–11166–00	PIPE, BREATHER 1	1	1	1			
2	90467–140A4	CLIP	1	1	1			
3	90468–08104	CLIP	1	1	1			

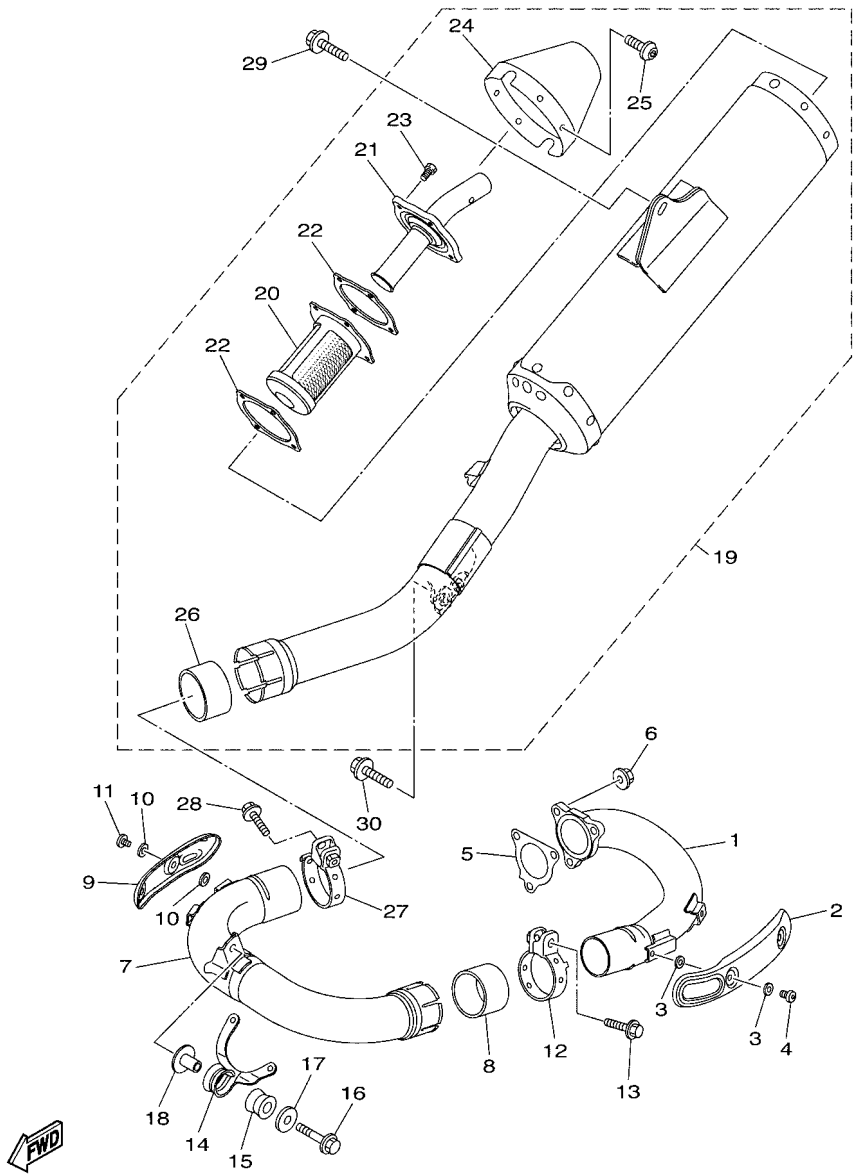

2GC1110-R120

FIG. 12 EXHAUST

REF. NO.	PART NO.	DESCRIPTION	2GC7	2GC8	2GC9			REMARKS
1	1SL–14611–00	PIPE, EXHAUST 1	1	1	1			
2	1SL–14628–00	PROTECTOR, EXHAUST PIPE	1	1	1			
3	90201–05017	WASHER, PLATE	4	4	4			
4	98980–06008	SCREW, BIND	2	2	2			
5	33D–14613–00	GASKET, EXHAUST PIPE	1	1	1			
6	95704–06500	NUT, FLANGE	3	3	3			
7	1SL–14621–00	PIPE, EXHAUST 2	1	1	1			
8	5XD–14714–00	GASKET, MUFFLER	1	1	1			
9	1SL–1463B–00	PROTECTOR, EXHAUST PIPE 2	1	1	1			
10	90201–05017	WASHER, PLATE	4	4	4			
11	98980–06008	SCREW, BIND	2	2	2			
12	1SL–14788–00	BAND, SILENCER	1	1	1			
13	95024–08040	BOLT, FLG.(SMALL HEAD)	1	1	1			
14	1SL–14639–00	STAY, EXHAUST PIPE 1	1	1	1			
15	5VY–14747–00	DAMPER, MUFFLER	1	1	1			
16	90105–08137	BOLT, FLANGE	1	1	1			
17	90201–08061	WASHER, PLATE	1	1	1			
18	90387–08081	COLLAR	1	1	1			
19	2GC–14701–00	MUFFLER COMP.	1	1	1			
20	5TJ–14780–00	.SPARK ARRESTER ASSY	1	1	1			
21	5TJ–14784–00	.PIPE, TAIL	1	1	1			
22	5TJ–14623–00	.GASKET, EXHAUST PIPE	2	2	2			
23	90110–05041	.BOLT, HEXAGON SOCKET HEAD	4	4	4			
24	5TJ–14799–00	.CAP	1	1	1			
25	92012–05008	.BOLT, BUTTON HEAD	6	6	6			
26	1SL–14714–00	.GASKET, MUFFLER	1	1	1			
27	1SL–14715–00	BAND, MUFFLER	1	1	1			

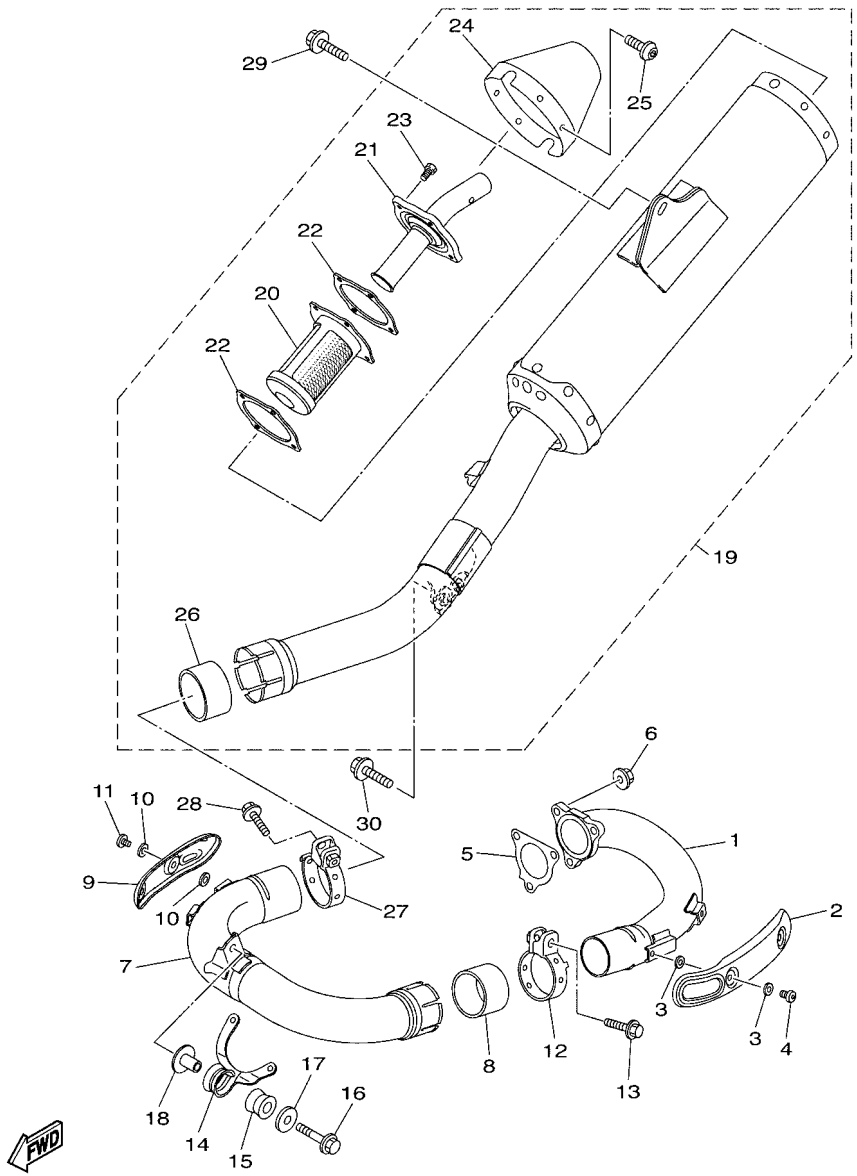

2GC1110-R120

FIG. 12 EXHAUST

REF. NO.	PART NO.	DESCRIPTION	2GC7	2GC8	2GC9			REMARKS
28	95024–08040	BOLT, FLG.(SMALL HEAD)	1	1	1			
29	90105–08230	BOLT, FLANGE	1	1	1			
30	90119–08170	BOLT, WITH WASHER	1	1	1			

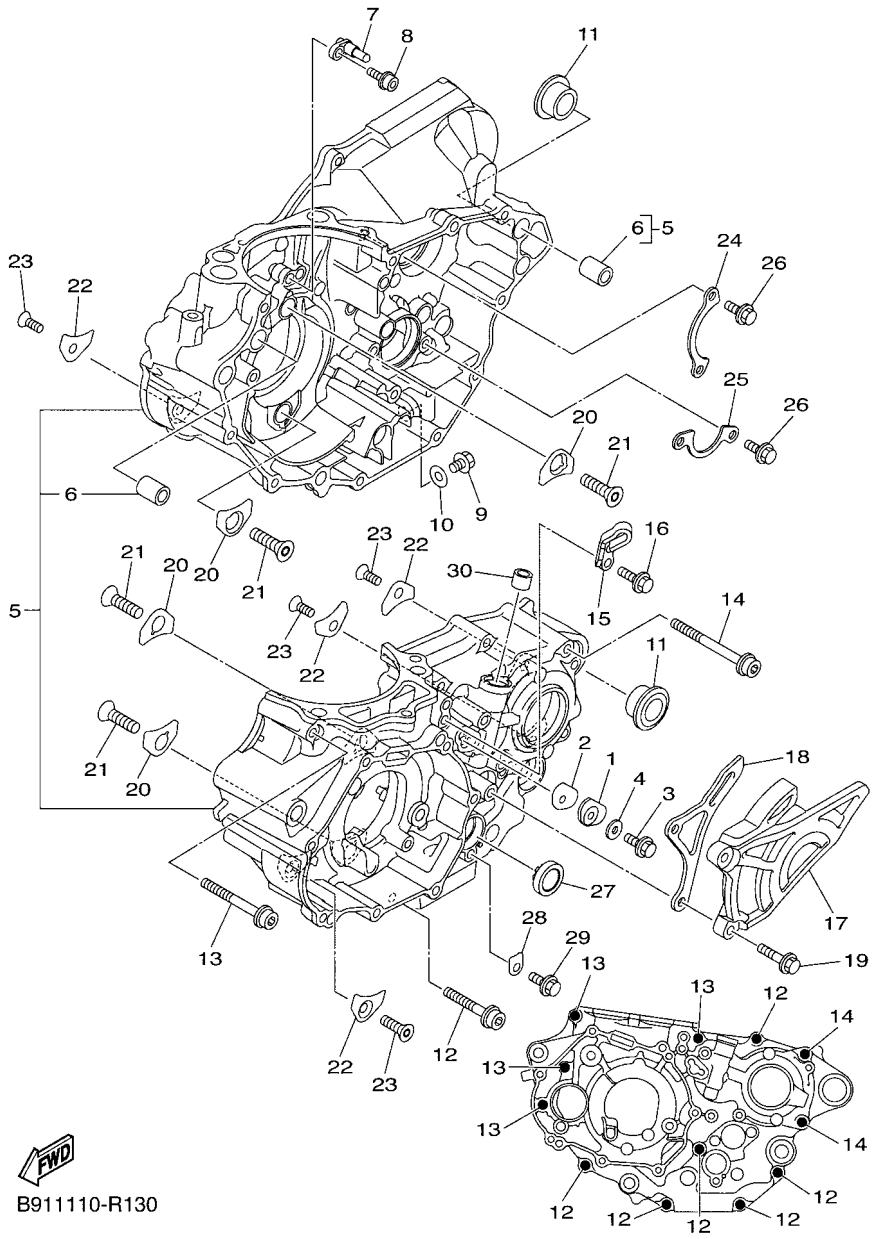

FIG. 13 CRANKCASE

REF. NO.	PART NO.	DESCRIPTION	2GC7	2GC8	2GC9			REMARKS
1	1SL–13371–00	PLATE	1	1	1			
2	1SL–13475–00	GASKET	1	1	1			
3	90105–06203	BOLT, FLANGE	1	1	1			
4	90430–06166	GASKET	1	1	1			
5	1SL–15100–09	CRANKCASE ASSY	1	1	1			
6	99530–14016	.PIN, DOWEL	2	2	2			
7	1SL–15155–00	NOZZLE 3	1	1	1			
8	90110–06168	BOLT, HEXAGON SOCKET HEAD	1	1	1			
9	95022–10016	BOLT, FLANGE	1	1	1			
10	90430–10188	GASKET	1	1	1			
11	90387–17015	COLLAR	2	2	2			
12	90110–06391	BOLT, HEXAGON SOCKET HEAD	6	6	6			
13	90110–06363	BOLT, HEXAGON SOCKET HEAD	4	4	4			
14	90110–06392	BOLT, HEXAGON SOCKET HEAD	2	2	2			
15	2GC–15441–00	HOLDER, CLUTCH CABLE	1	1	1			
16	90105–06099	BOLT, FLANGE	2	2	2			
17	1SL–15421–00	COVER, CRANKCASE 2	1	1	1			
18	1SL–17466–00	GUIDE, CHAIN	1	1	1			
19	90105–06189	BOLT, FLANGE	2	2	2			
20	18P–15383–00	PLATE, BEARING COVER	4	4	4			
21	90151–08003	SCREW, COUNTERSUNK	4	4	4			
22	4JT–15381–01	PLATE, BEARING COVER	4	4	4			
23	90149–06074	SCREW	4	4	4			
24	1SL–15388–00	PLATE, BEARING COVER	1	1	1			
25	1SL–18562–00	PLATE, STOPPER 2	1	1	1			
26	90105–06081	BOLT, FLANGE	4	4	4			
27	3Y1–15361–00	GAUGE, LEVEL	1	1	1			

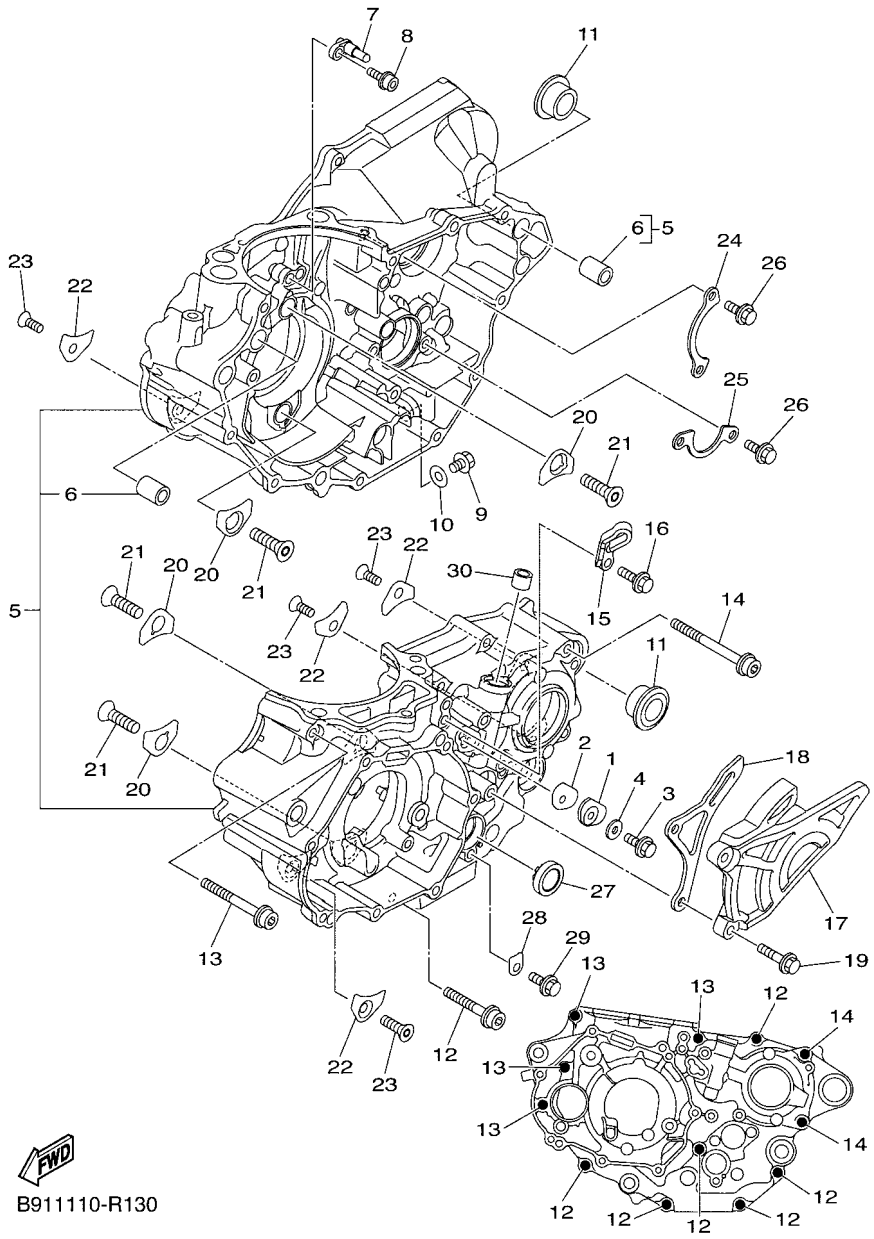

FIG. 13 CRANKCASE

REF. NO.	PART NO.	DESCRIPTION	2GC7	2GC8	2GC9			REMARKS
28	5XC–15118–00	HOLDER	1	1	1			
29	95022–06010	BOLT, FLANGE	1	1	1			
30	90384–06003	BUSH, BIMETAL FORMED	1	1	1			

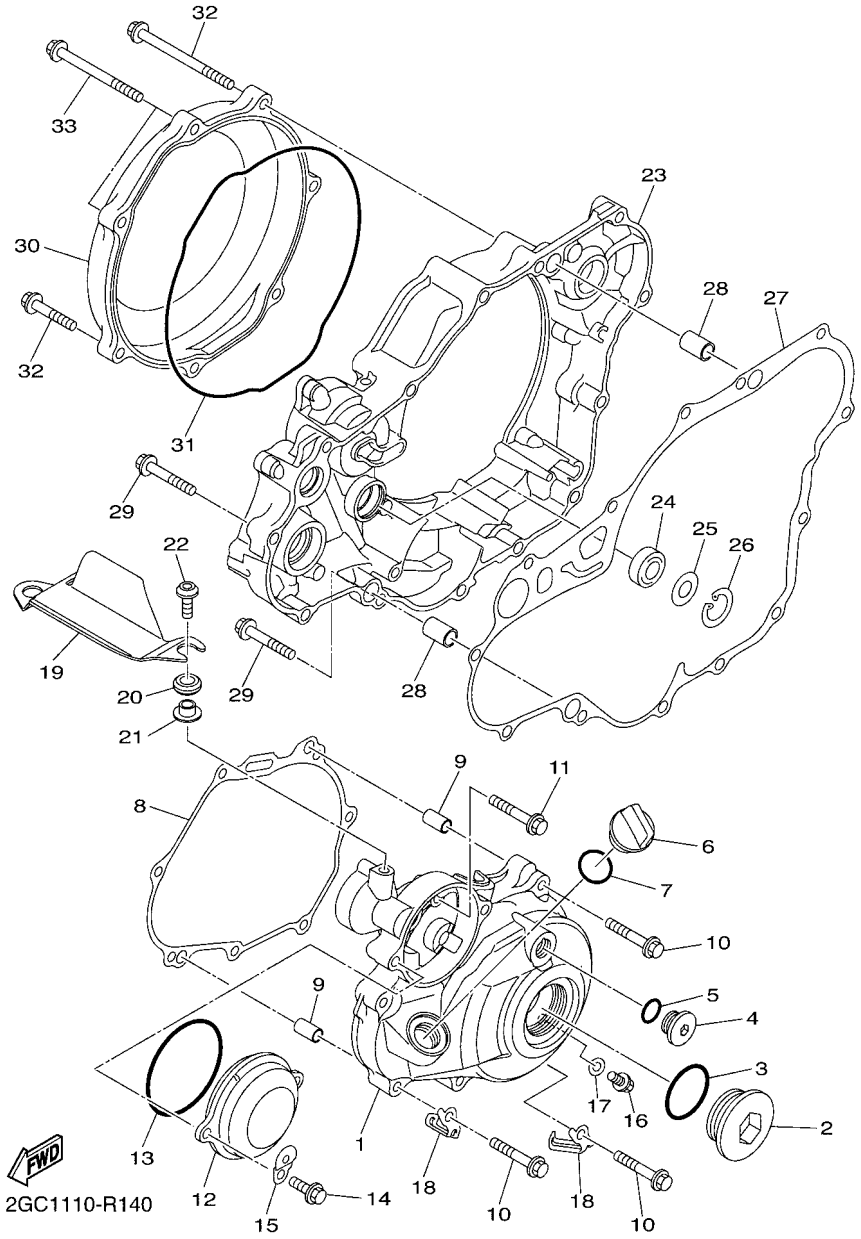

FIG. 14 CRANKCASE COVER 1

REF. NO.	PART NO.	DESCRIPTION	2GC7	2GC8	2GC9			REMARKS
1	2GC–15411–00	COVER, CRANKCASE 1	1	1	1			
2	90340–36002	PLUG, STRAIGHT SCREW	1	1	1			
3	93210–357A3	O-RING	1	1	1			
4	90340–14011	PLUG, STRAIGHT SCREW	1	1	1			
5	93210–14369	O-RING	1	1	1			
6	3Y1–15363–10	PLUG, OIL	1	1	1			
7	93210–19123	O-RING	1	1	1			
8	1SL–15451–00	GASKET, CRANKCASE COVER 1	1	1	1			
9	99530–08016	PIN, DOWEL	2	2	2			
10	95022–06030	BOLT, FLANGE	6	6	6			
11	95022–06020	BOLT, FLANGE	1	1	1			
12	5TJ–1549B–30	COVER ASSY 2	1	1	1			
13	93210–58346	O-RING	1	1	1			
14	95022–06014	BOLT, FLANGE	2	2	2			
15	2GC–15199–00	BRACKET	1	1	1			
16	95022–06012	BOLT, FLANGE	1	1	1			
17	90430–06014	GASKET	1	1	1			
18	90465–08062	CLAMP	2	2	2			
19	2GC–15436–00	COVER, STARTING MOTOR	1	1	1			
20	90480–12581	GROMMET	2	2	2			
21	90387–06142	COLLAR	2	2	2			
22	90111–06116	BOLT,HEX. SOCKET BUTTON	1	1	1			
23	1SL–15431–00	COVER, CRANKCASE 3	1	1	1			
24	93101–14164	OIL SEAL	1	1	1			
25	90201–15701	WASHER, PLATE (T=1.0)	1	1	1			
26	99009–22500	CIRCLIP	1	1	1			
27	1SL–15462–00	GASKET, CRANKCASE COVER 3	1	1	1			

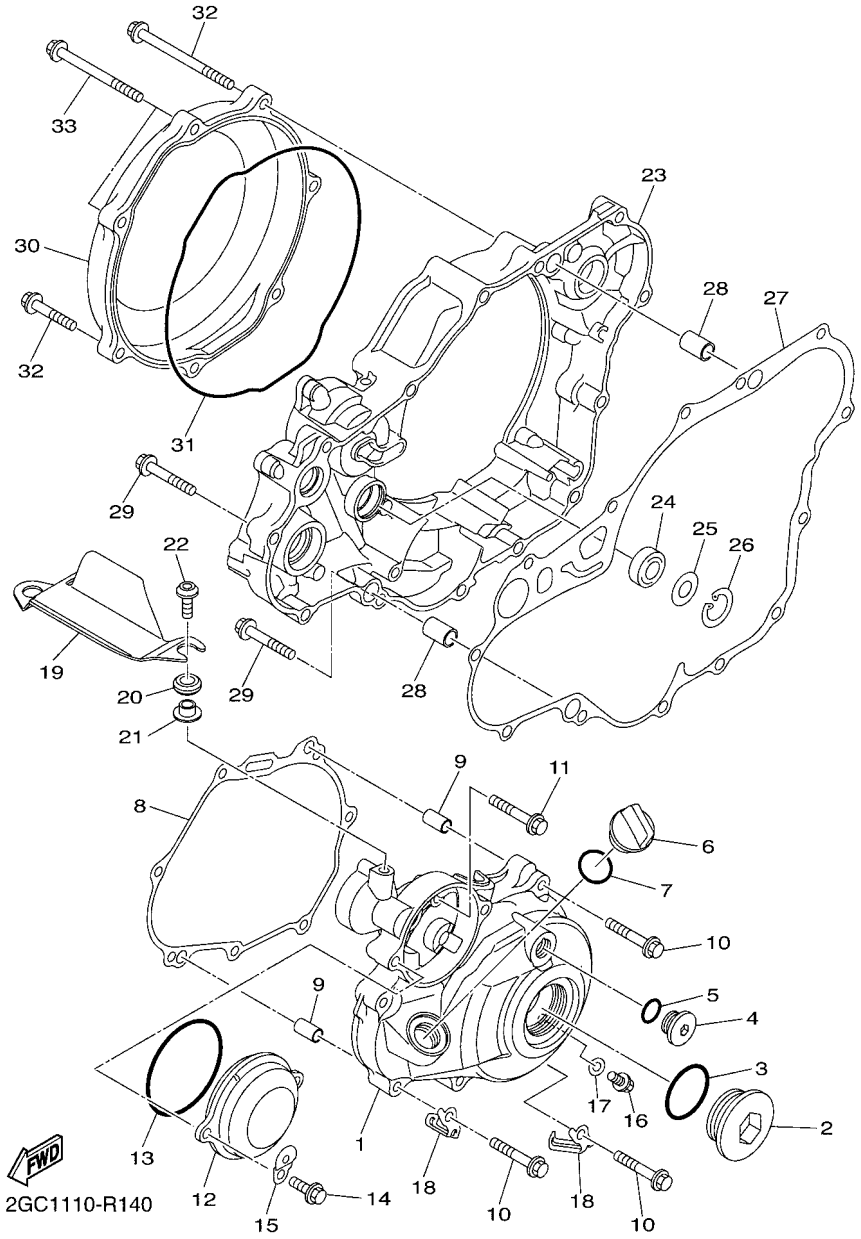

FIG. 14 CRANKCASE COVER 1

REF. NO.	PART NO.	DESCRIPTION	2GC7	2GC8	2GC9			REMARKS
28	99530–12016	PIN, DOWEL	2	2	2			
29	95022–06030	BOLT, FLANGE	11	11	11			
30	33D–15415–10	COVER, 1	1	1	1			
31	33D–15453–00	GASKET	1	1	1			
32	95022–06025	BOLT, FLANGE	5	5	5			
33	95022–06070	BOLT, FLANGE	2	2	2			

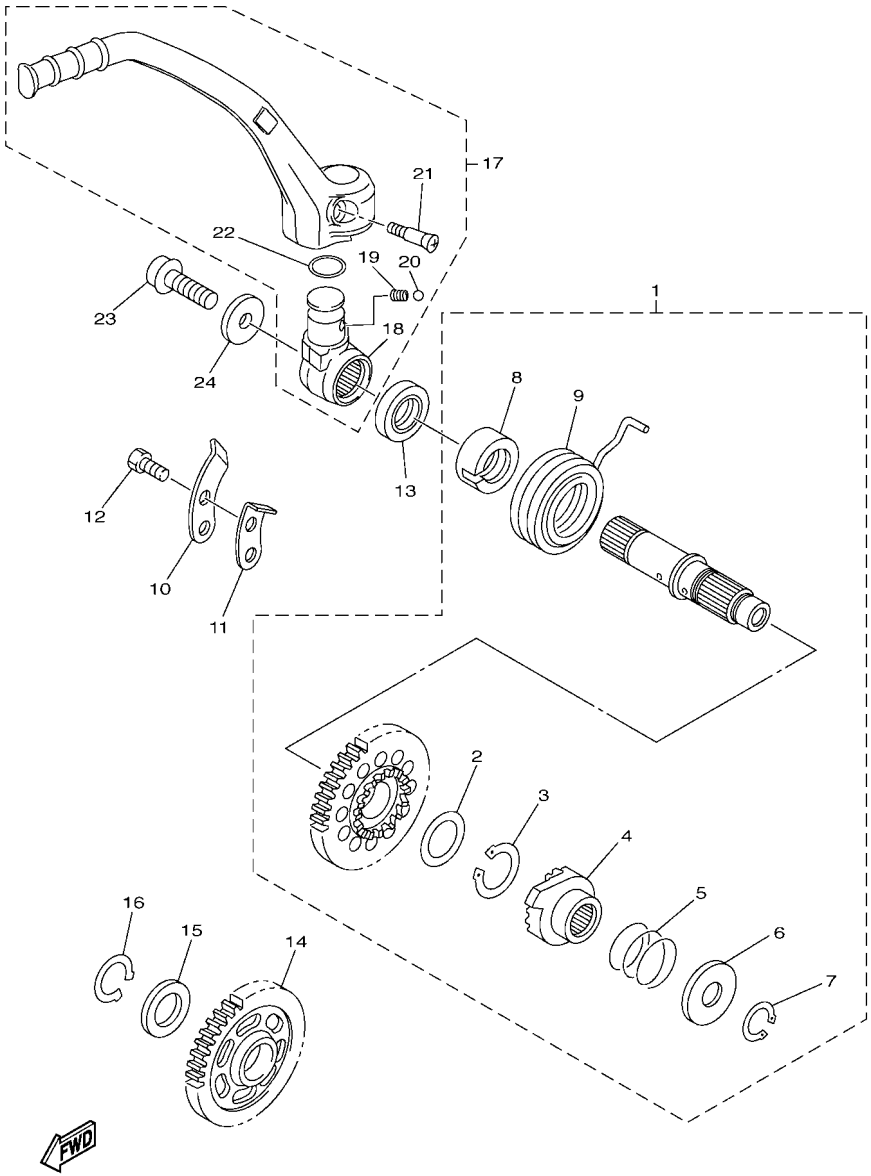

1SL1110-N140

FIG. 15 STARTER

REF. NO.	PART NO.	DESCRIPTION	2GC7	2GC8	2GC9			REMARKS
1	2S2–15601–00	KICK SHAFT ASSY	1	1	1			
2	90201–20685	.WASHER, PLATE (T=0.5)	1	1	1			
3	93410–20038	.CIRCLIP	1	1	1			
4	2S2–15671–00	.WHEEL, RATCHET	1	1	1			
5	90501–160A2	.SPRING, COMPRESSION	1	1	1			
6	90201–167P7	.WASHER, PLATE	1	1	1			
7	99009–16400	.CIRCLIP	1	1	1			
8	5GR–15664–00	.GUIDE, SPRING	1	1	1			
9	90508–305B0	.SPRING, TORSION	1	1	1			
10	3Y6–15674–00	GUIDE, RATCHET WHEEL	1	1	1			
11	2NX–15668–00	STOPPER	1	1	1			
12	90101–06044	BOLT	2	2	2			
13	93102–20108	OIL SEAL	1	1	1			
14	5TA–15651–00	GEAR, KICK IDLE	1	1	1			
15	90201–20685	WASHER, PLATE (T=0.5)	1	1	1			
16	99009–20400	CIRCLIP	1	1	1			
17	1SL–15620–00	KICK CRANK ASSY	1	1	1			
18	1SL–15621–00	.BOSS, KICK CRANK	1	1	1			
19	90501–147A5	.SPRING, COMPRESSION	1	1	1			
20	93507–32009	.BALL	1	1	1			
21	90151–06045	.SCREW, COUNTERSUNK	1	1	1			
22	93210–17570	.O-RING	1	1	1			
23	90110–08087	BOLT, HEXAGON SOCKET HEAD	1	1	1			
24	90201–08047	WASHER, PLATE	1	1	1			

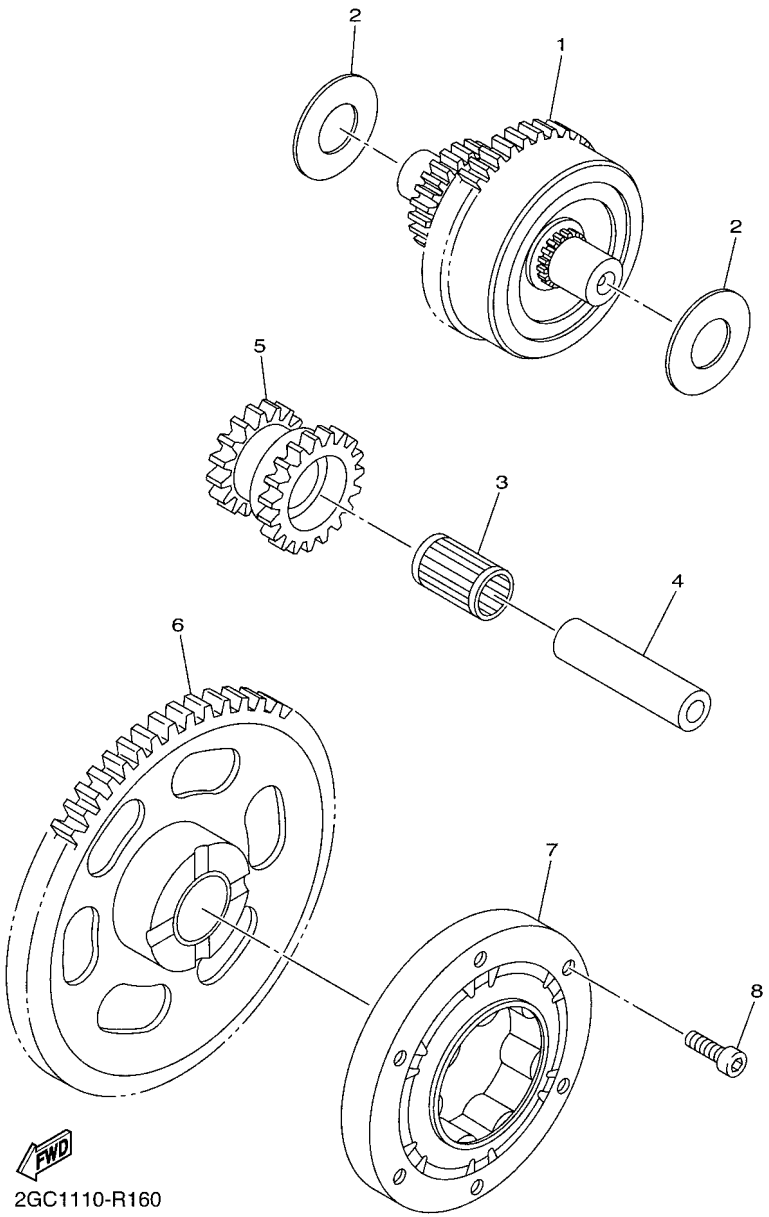

FIG. 16 STARTER CLUTCH

REF. NO.	PART NO.	DESCRIPTION	2GC7	2GC8	2GC9			REMARKS
1	5TJ–15560–20	DAMPER ASSY	1	1	1			
2	90201–105A8	WASHER, PLATE	2	2	2			
3	93310–212R6	BEARING	1	1	1			
4	4GY–15521–00	SHAFT 1	1	1	1			
5	2GC–15517–00	GEAR, IDLER 2	1	1	1			
6	2GB–15515–00	GEAR 3	1	1	1			
7	5TJ–15590–00	STARTER ONE-WAY ASSY	1	1	1			
8	90110–06168	BOLT, HEXAGON SOCKET HEAD	6	6	6			

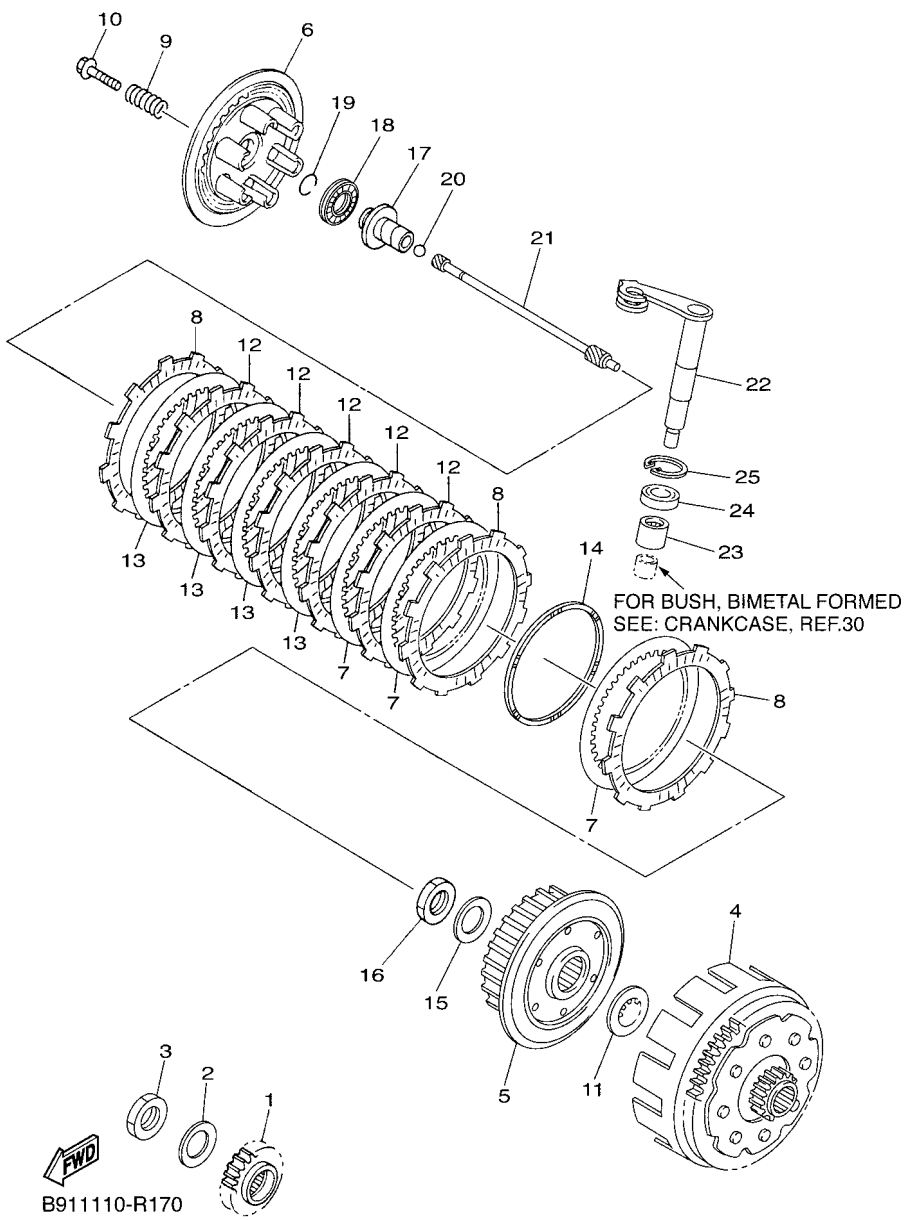

FIG. 17 CLUTCH

REF. NO.	PART NO.	DESCRIPTION	2GC7	2GC8	2GC9			REMARKS
1	2S2–16111–60	GEAR, PRIMARY DRIVE	1	1	1			
2	90208–20008	WASHER, CONICAL SPRING	1	1	1			
3	90170–20255	NUT	1	1	1			
4	B11–16150–00	PRIMARY DRIVEN GEAR COMP.	1	1	1			
5	5TA–16371–20	BOSS, CLUTCH	1	1	1			
6	5JG–16351–00	PLATE, PRESSURE 1	1	1	1			
7	4X7–16325–00	PLATE, CLUTCH 2	3	3	3			
8	5TA–16321–00	PLATE, FRICTION	3	3	3			
9	90501–230E4	SPRING, COMPRESSION	6	6	6			
10	90159–06010	SCREW, WITH WASHER	6	6	6			
11	5XD–16154–00	PLATE, THRUST 1	1	1	1			
12	5VY–16321–00	PLATE, FRICTION	5	5	5			
13	1TA–16325–00	PLATE, CLUTCH 2	4	4	4			
14	2GC–16383–00	SPRING.,CUSHION	1	1	1			
15	90208–20008	WASHER, CONICAL SPRING	1	1	1			
16	90170–20255	NUT	1	1	1			
17	33D–16356–00	ROD, PUSH 1	1	1	1			
18	93340–21209	BEARING	1	1	1			
19	93440–10085	CIRCLIP	1	1	1			
20	93511–32027	BALL	1	1	1			
21	1SL–16357–10	ROD, PUSH 2	1	1	1			
22	2GC–16381–10	PUSH LEVER COMP.	1	1	1			
23	93317–11096	BEARING	1	1	1			
24	93102–10008	OIL SEAL	1	1	1			
25	99009–18500	CIRCLIP	1	1	1			

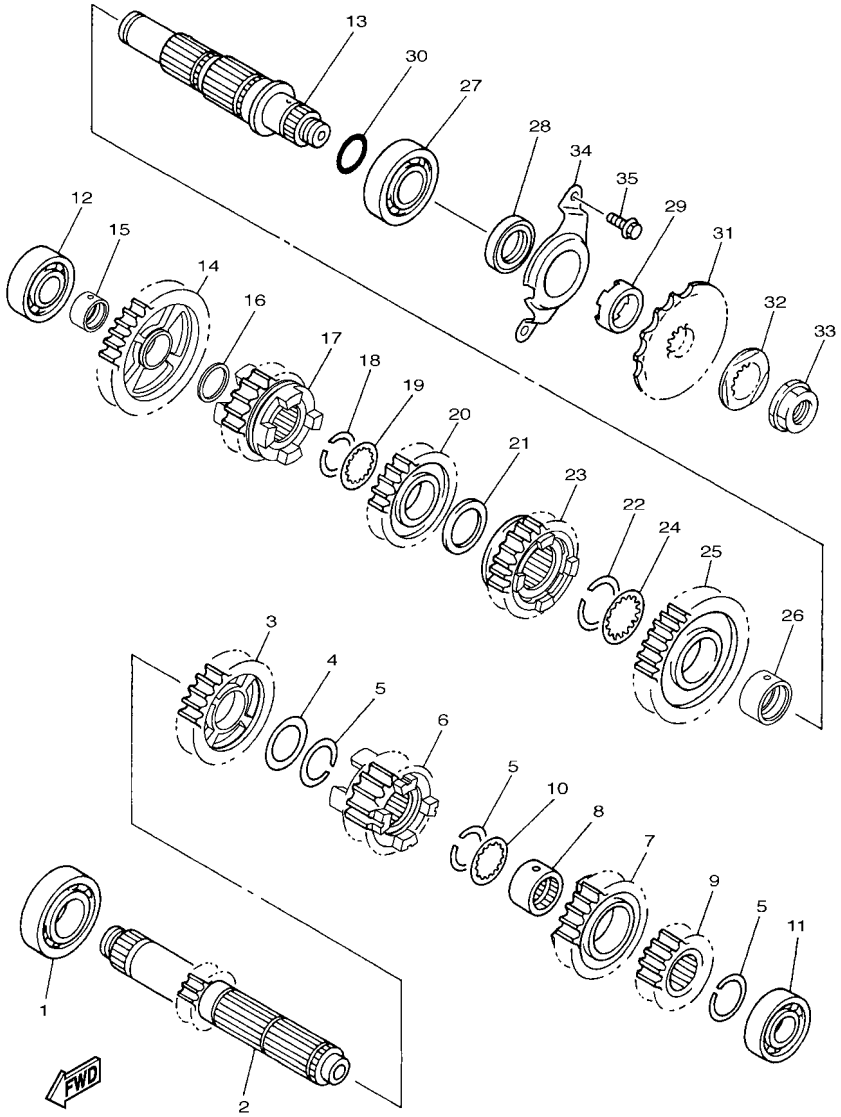

1SL1110-N160

FIG. 18 TRANSMISSION

REF. NO.	PART NO.	DESCRIPTION	2GC7	2GC8	2GC9			REMARKS
1	93306–20532	BEARING	1	1	1			
2	5TJ–17411–30	AXLE, MAIN	1	1	1			
3	5TJ–17151–20	GEAR, 5TH PINION(25T)	1	1	1			
4	90201–253K0	WASHER, PLATE (T=1.0)	1	1	1			
5	93440–25084	CIRCLIP	3	3	3			
6	2GC–17131–00	GEAR, 3RD PINION(16T)	1	1	1			
7	5TJ–17141–20	GEAR, 4TH PINION (20T)	1	1	1			
8	90387–21005	COLLAR	1	1	1			
9	5TJ–17121–20	GEAR, 2ND PINION(15T)	1	1	1			
10	90209–21332	WASHER	1	1	1			
11	93306–00447	BEARING	1	1	1			
12	93306–00426	BEARING	1	1	1			
13	1SL–17402–00	DRIVE AXLE ASSY	1	1	1			
14	5TJ–17211–20	GEAR, 1ST WHEEL(29T)	1	1	1			
15	90387–20028	COLLAR	1	1	1			
16	90201–203E7	WASHER, PLATE	1	1	1			
17	2GC–17251–00	GEAR, 5TH WHEEL(21T)	1	1	1			
18	93440–25084	CIRCLIP	1	1	1			
19	90209–22008	WASHER	1	1	1			
20	5TJ–17231–20	GEAR, 3RD WHEEL(21T)	1	1	1			
21	90201–253K0	WASHER, PLATE (T=1.0)	1	1	1			
22	93440–28062	CIRCLIP	1	1	1			
23	5TJ–17241–20	GEAR, 4TH WHEEL(21T)	1	1	1			
24	90209–26348	WASHER	1	1	1			
25	5TJ–17221–20	GEAR, 2ND WHEEL(26T)	1	1	1			
26	90387–28012	COLLAR	1	1	1			
27	93306–205A5	BEARING	1	1	1			

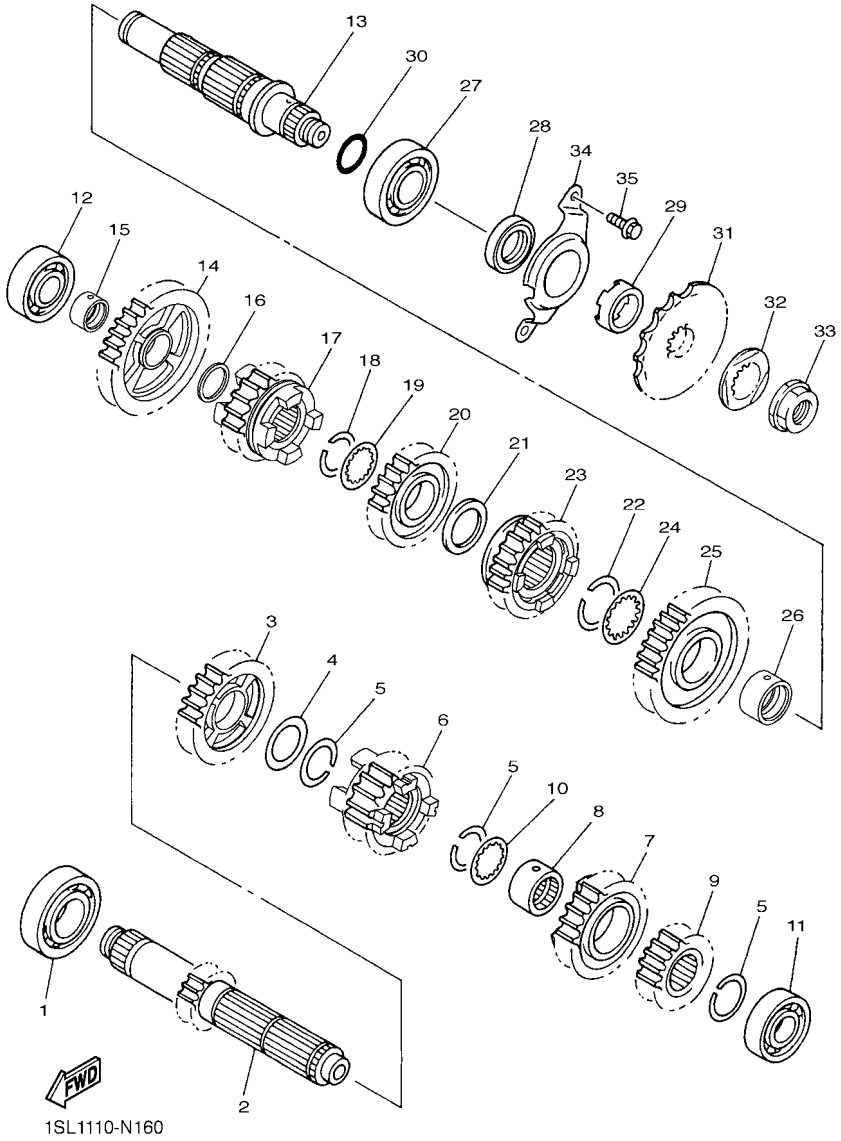

FIG. 18 TRANSMISSION

REF. NO.	PART NO.	DESCRIPTION	2GC7	2GC8	2GC9			REMARKS
28	93102–32014	OIL SEAL	1	1	1			
29	90387–2513F	COLLAR	1	1	1			
30	93210–22164	O-RING	1	1	1			
31	9383E–13233	SPROCKET, DRIVE (13T)	1	1	1			
32	90215–21003	WASHER, LOCK	1	1	1			
33	90179–20001	NUT	1	1	1			
34	1SL–17471–00	PLATE, COVER	1	1	1			
35	90105–06081	BOLT, FLANGE	2	2	2			

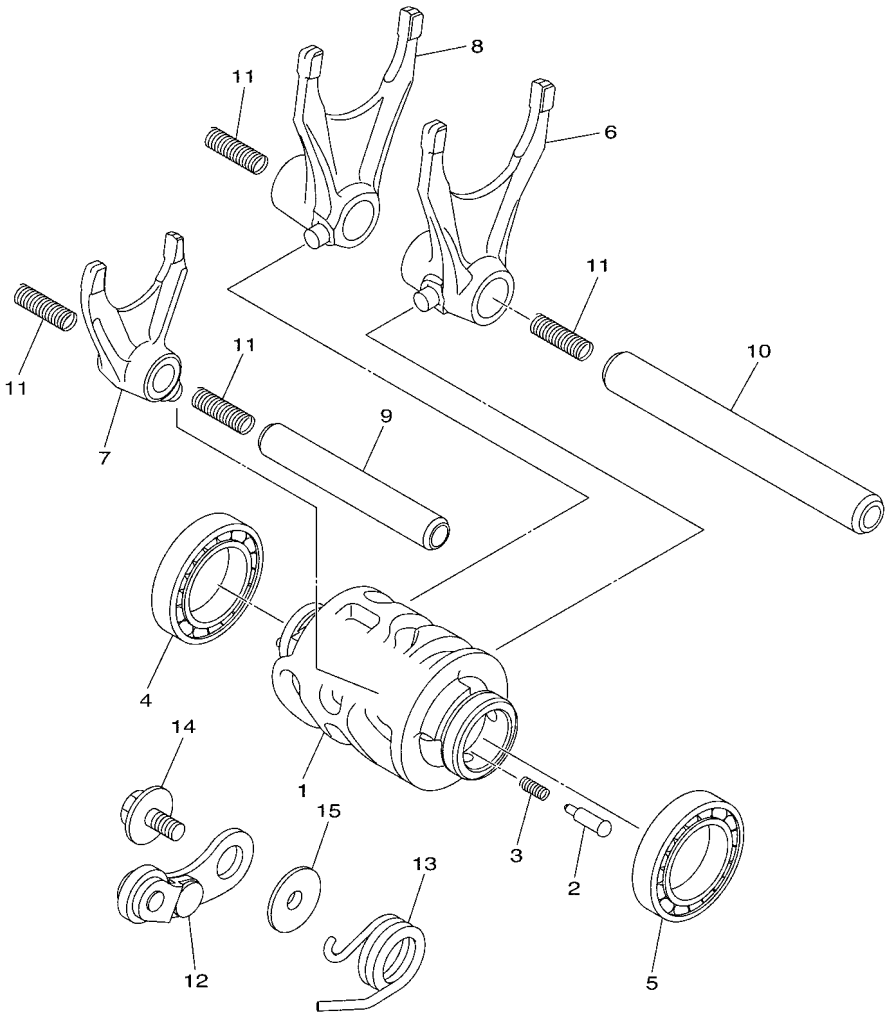

2GC1110-R190

FIG. 19 SHIFT CAM & FORK

REF. NO.	PART NO.	DESCRIPTION	2GC7	2GC8	2GC9			REMARKS
1	1SL–18541–00	CAM, SHIFT	1	1	1			
2	3D7–18542–00	POINT, NEUTRAL	1	1	1			
3	90501–06022	SPRING, COMPRESSION	1	1	1			
4	93306–90409	BEARING	1	1	1			
5	93306–80502	BEARING	1	1	1			
6	1SL–18511–00	FORK, SHIFT 1	1	1	1			
7	1SL–18512–00	FORK, SHIFT 2	1	1	1			
8	1SL–18513–00	FORK, SHIFT 3	1	1	1			
9	1SL–18531–00	BAR, SHIFT FORK GUIDE 1	1	1	1			
10	1SL–18535–00	BAR, SHIFT FORK GUIDE 2	1	1	1			
11	90501–064L1	SPRING, COMPRESSION	4	4	4			
12	2GB–18140–10	STOPPER LEVER ASSY	1	1	1			
13	90508–29041	SPRING, TORSION	1	1	1			
14	90159–06027	SCREW, WITH WASHER	1	1	1			
15	33D–18175–00	SPACER	1	1	1			

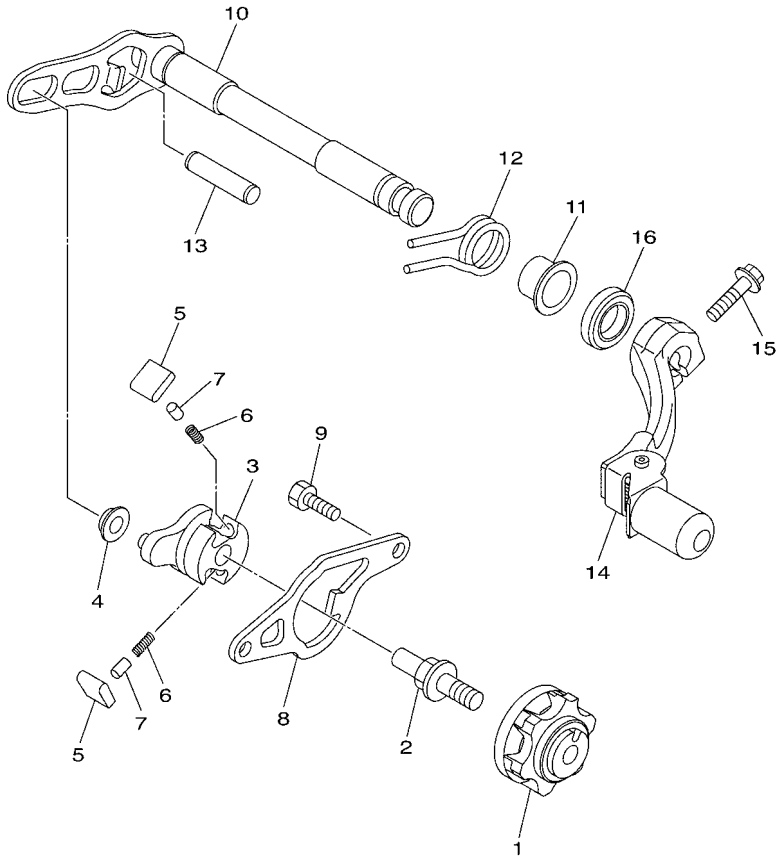

2GC1110-R200

FIG. 20 SHIFT SHAFT

REF. NO.	PART NO.	DESCRIPTION	2GC7	2GC8	2GC9			REMARKS
1	2GB–18185–00	SEGMENT	1	1	1			
2	3XJ–18173–10	PIN, SHIFT	1	1	1			
3	1SL–18122–00	LEVER, SHIFT 2	1	1	1			
4	3XJ–18178–00	ROLLER, SHIFT LEVER	1	1	1			
5	3XJ–18182–00	PAWL, SHIFTER	2	2	2			
6	90501–052G5	SPRING, COMPRESSION	2	2	2			
7	3XJ–18184–00	PIN, PAWL	2	2	2			
8	1SL–18172–00	GUIDE, SHIFT	1	1	1			
9	90101–06041	BOLT	2	2	2			
10	2GC–18101–00	SHIFT SHAFT ASSY	1	1	1			
11	90387–14020	COLLAR	1	1	1			
12	90508–29023	SPRING, TORSION	1	1	1			
13	93608–33002	PIN, DOWEL	1	1	1			
14	1SM–18110–00	SHIFT PEDAL ASSY	1	1	1			
15	90119–06M12	BOLT, WITH WASHER	1	1	1			
16	93109–14010	OIL SEAL	1	1	1			

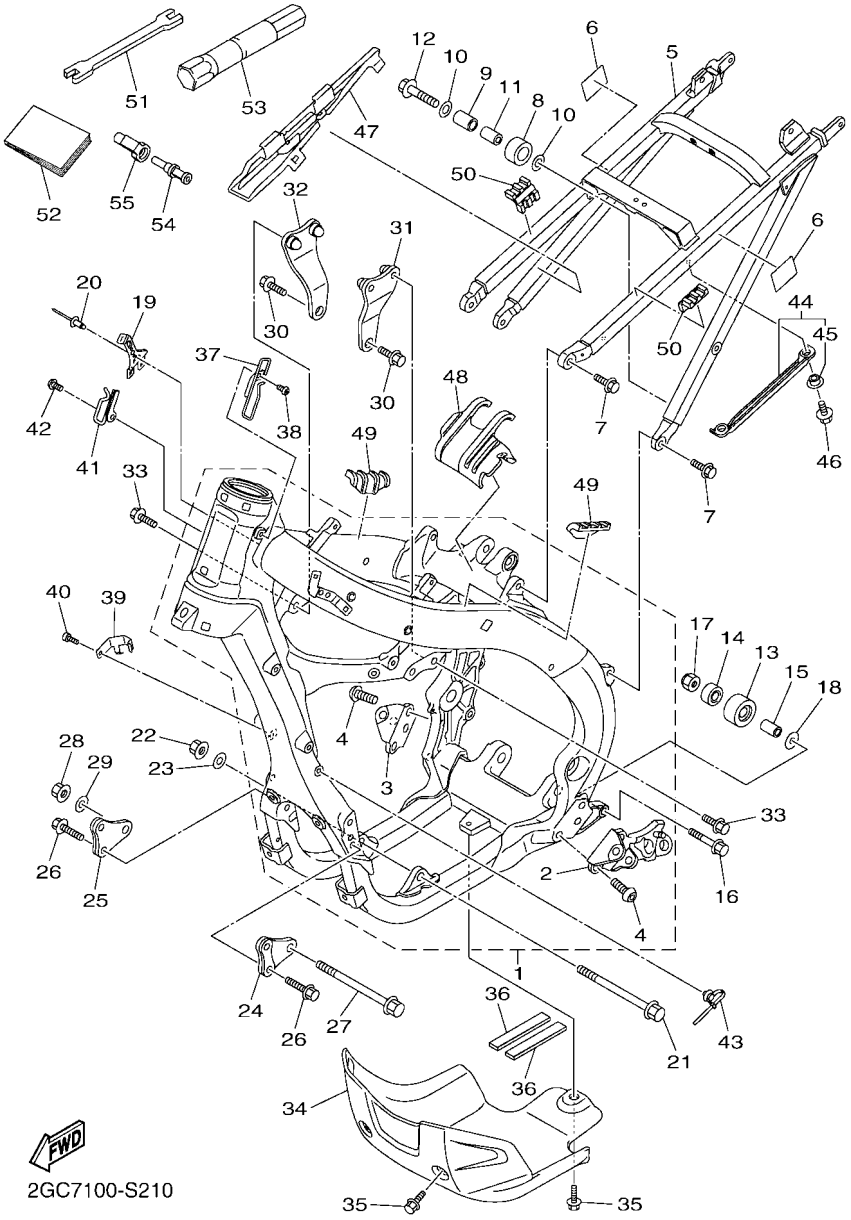

FIG. 21 FRAME

REF. NO.	PART NO.	DESCRIPTION	2GC7	2GC8	2GC9			REMARKS
1	2GC–21101–01	FRONT FRAME COMP.	1	1	1			
2	2GB–21447–00	.BRACKET, FOOTREST	1	1	1			
3	17D–21448–00	.BRACKET, FOOTREST	1	1	1			
4	90149–10031	.SCREW	4	4	4			
5	1SL–21190–10	REAR FRAME COMP.	1	1	1			
6	33D–23472–00	PROTECTOR	2	2	2			
7	90105–08230	BOLT, FLANGE	4	4	4			
8	30X–22178–00	TENSIONER	1	1	1			
9	4V4–22184–00	BUSH	1	1	1			
10	90201–08045	WASHER, PLATE	2	2	2			
11	90387–08041	COLLAR	1	1	1			
12	95022–08040	BOLT, FLANGE	1	1	1			
13	3JD–22178–20	TENSIONER	1	1	1			
14	93300–60839	BEARING	1	1	1			
15	90387–086N4	COLLAR	1	1	1			
16	90105–08133	BOLT, FLANGE	1	1	1			
17	90185–08009	NUT, SELF-LOCKING	1	1	1			
18	90201–08043	WASHER, PLATE	1	1	1			
19	2GB–21149–00	BRACKET, BATTERY BOX	1	1	1			
20	90267–32146	RIVET, BLIND	2	2	2			
21	90105–10456	BOLT, FLANGE	1	1	1			
22	90179–10658	NUT	1	1	1			
23	90201–10045	WASHER, PLATE	1	1	1			
24	2GC–21417–00	BRACKET, FRONT LOWER 1	1	1	1			
25	2GC–21418–00	BRACKET, FRONT LOWER 2	1	1	1			
26	90105–08143	BOLT, FLANGE	4	4	4			
27	90105–10176	BOLT, FLANGE	1	1	1			

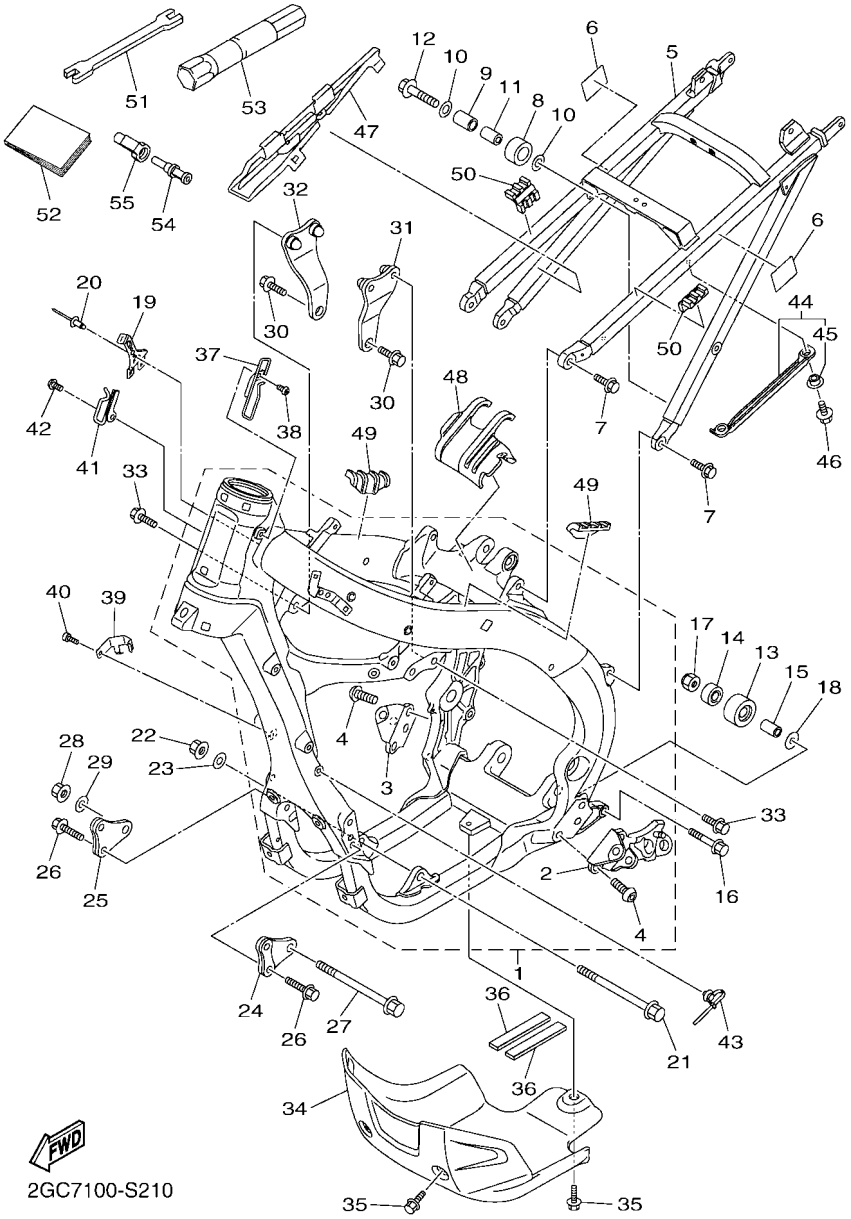

FIG. 21 FRAME

REF. NO.	PART NO.	DESCRIPTION	2GC7	2GC8	2GC9			REMARKS
28	90179–10658	NUT	1	1	1			
29	90201–10045	WASHER, PLATE	1	1	1			
30	90105–10189	BOLT, FLANGE	2	2	2			
31	2GC–21425–00	BRACKET, REAR UPPER 1	1	1	1			
32	2GC–21426–00	BRACKET, REAR UPPER 2	1	1	1			
33	90105–08143	BOLT, FLANGE	4	4	4			
34	1DX–2147A–00	GUARD, ENGINE 1	1	1	1			
35	90119–06166	BOLT, WITH WASHER	3	3	3			
36	90520–04011	DAMPER, PLATE	2	2	2			
37	1SL–21163–01	HOLDER, CLUTCH CABLE	1	1	1			
38	92012–06010	BOLT, BUTTON HEAD	1	1	1			
39	1SL–2134V–01	BRACKET	1	1	1			
40	91312–05008	BOLT	1	1	1			
41	2GB–21163–00	HOLDER, CLUTCH CABLE	1	1	1			
42	92012–06010	BOLT, BUTTON HEAD	1	1	1			
43	90464–31002	CLAMP	1	1	1			
44	1SL–2171E–00	COVER, SIDE 5	1	1	1			
45	90387–065T2	.COLLAR	2	2	2			
46	95022–06016	BOLT, FLANGE	2	2	2			
47	2GB–2171X–00	COVER, SIDE 6	1	1	1			
48	2GB–24181–00	DAMPER, LOCATING 1	1	1	1			
49	33D–24182–00	DAMPER, LOCATING 2	2	2	2			
50	33D–24183–00	DAMPER, LOCATING 3	2	2	2			
51	5ET–28166–10	WRENCH, HEXAGON	1	1	1			
52	2GC–28199–41	MANUAL,OWNER'S		1				UR
	2GC–28199–71	MANUAL,OWNER'S		1				UR
53	5SL–2814F–00	BOX, SPARK PLUG	1	1	1			

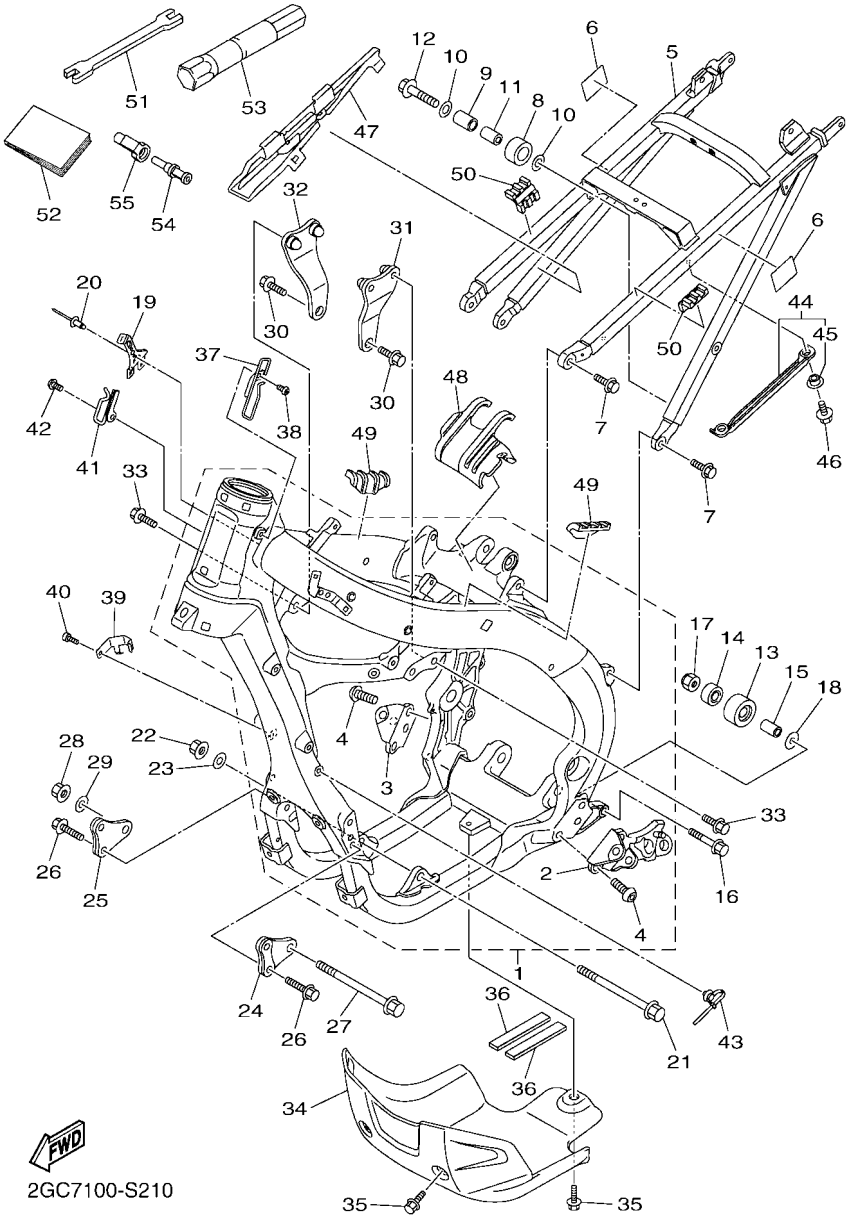

FIG. 21 FRAME

REF. NO.	PART NO.	DESCRIPTION	2GC7	2GC8	2GC9			REMARKS
54	18P–2467E–00	CAP	1	1	1			
55	18P–2464V–00	CASE, CAP	1	1	1			

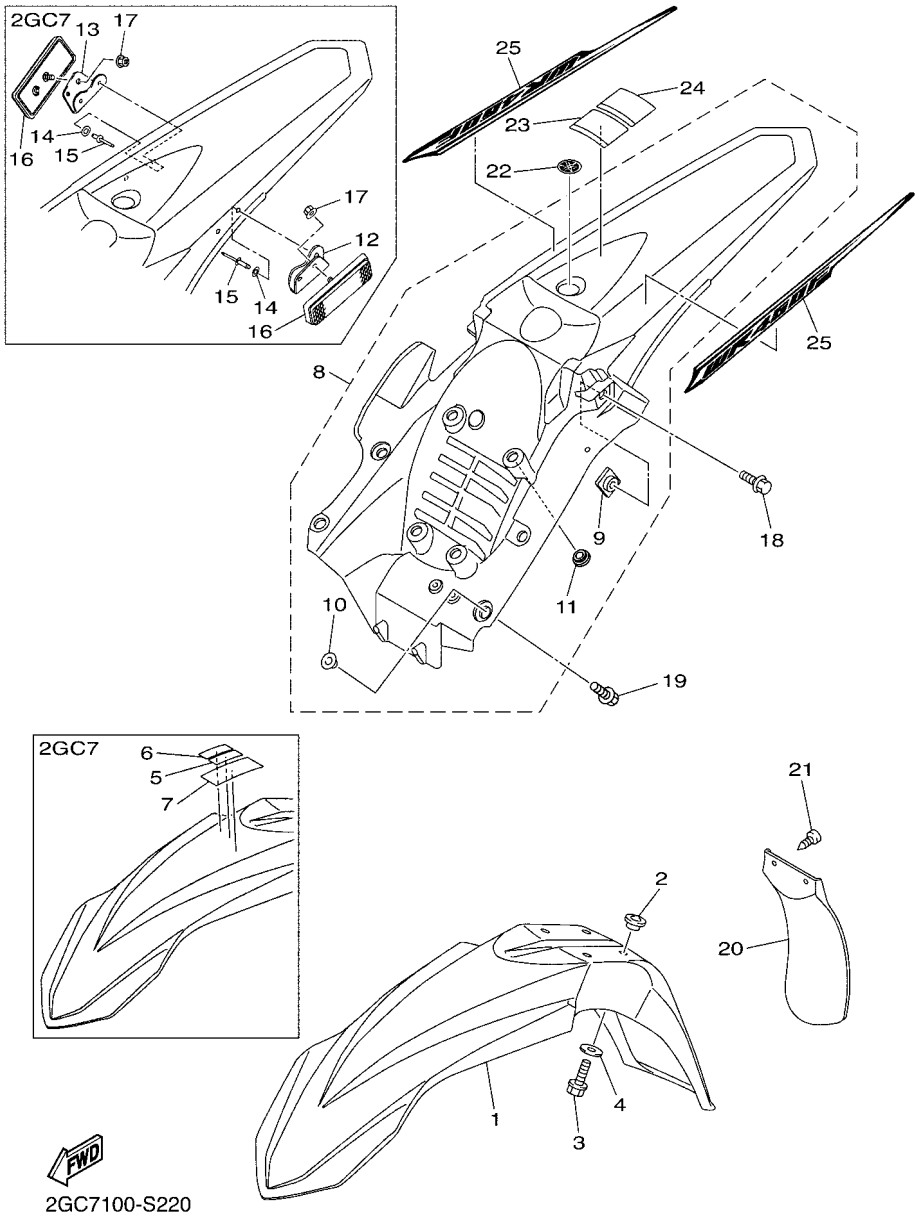

FIG. 22 FENDER

REF. NO.	PART NO.	DESCRIPTION	2GC7	2GC8	2GC9			REMARKS
1	17D–21511–50	FENDER, FRONT	1	1	1			
2	90387–06259	COLLAR	4	4	4			
3	90105–06127	BOLT, FLANGE	4	4	4			
4	90201–06108	WASHER, PLATE	4	4	4			
5	3FB–2415E–02	LABEL, CAUTION	1					
6	3FB–2415E–12	LABEL, CAUTION	1					
7	3PT–2416E–10	LABEL, CAUTION CANADA	1					
8	2GB–21610–U0	REAR FENDER COMP.	1					
	2GB–21610–00	REAR FENDER COMP.		1	1			
9	5XE–21635–10	.NUT, REAR FENDER	2	2	2			
10	5BE–21749–00	.COLLAR	4	4	4			
11	90387–08086	.COLLAR	4	4	4			
12	5TJ–2164F–U0	STAY 1	1					
13	5TJ–2164G–U0	STAY 2	1					
14	90201–04018	WASHER, PLATE	4					
15	90267–40077	RIVET, BLIND	4					
16	3Y6–85130–02	REAR REFLECTOR ASSY	2					
17	95602–05200	NUT, SELF-LOCKING	2					
18	90105–06100	BOLT, FLANGE	2	2	2			
19	90119–06268	BOLT, WITH WASHER	4	4	4			
20	3D7–21642–00	GUARD, FLAP	1	1	1			
21	97702–60016	SCREW, TAPPING	2	2	2			
22	5FK–2175C–30	TUNING FORK MARK	1	1	1			
23	5PA–2118K–00	LABEL, CAUTION	1		1			
	5PG–2816R–00	LABEL, WARNING GENERAL INFO.		1				
24	5PA–2118K–10	LABEL, CAUTION	1					
25	2GC–2165A–00	GRAPHIC SET,REAR FENDER	1	1	1			

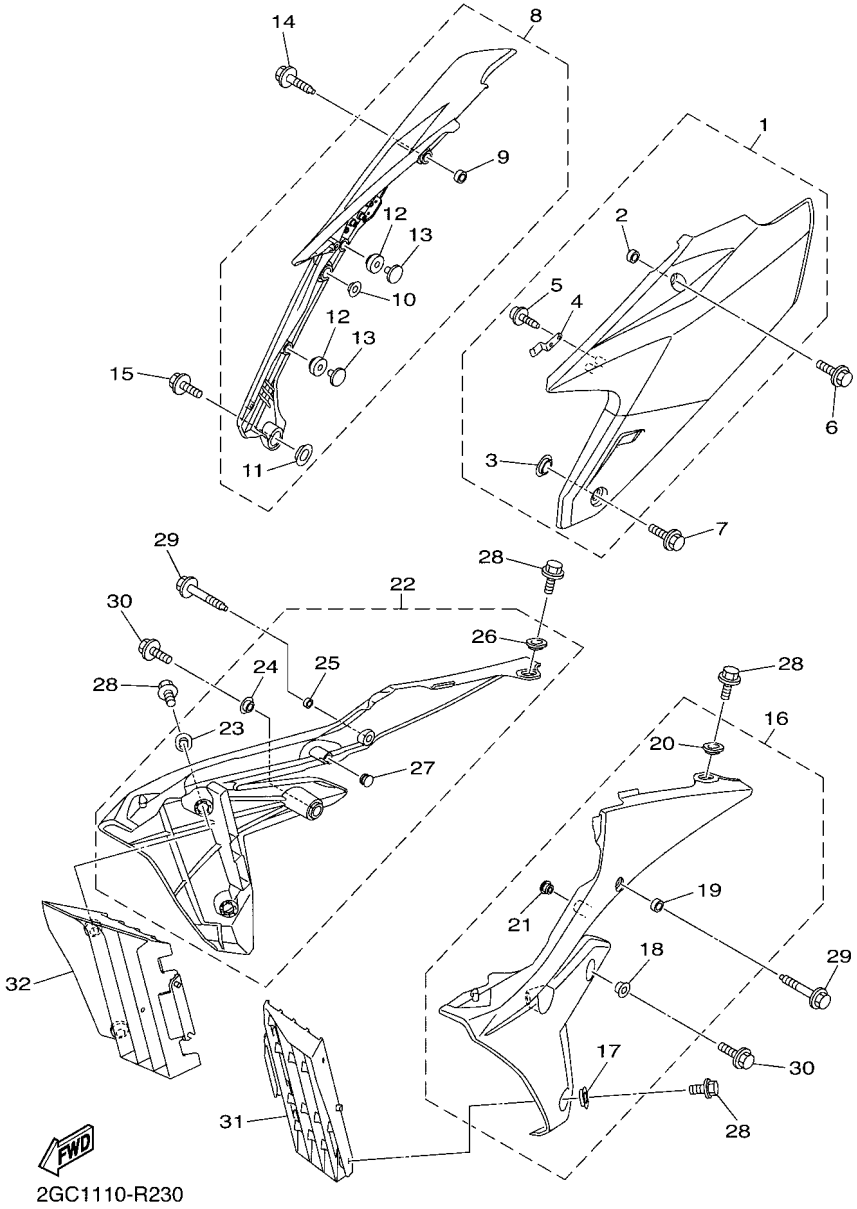

FIG. 23 SIDE COVER

REF. NO.	PART NO.	DESCRIPTION	2GC7	2GC8	2GC9			REMARKS
1	1SL–21710–00	SIDE COVER ASSY 1	1	1	1			
2	90387–08057	.COLLAR	1	1	1			
3	5TA–21749–00	.COLLAR	1	1	1			
4	1SL–2176M–00	.HOOK	1	1	1			
5	97702–40012	.SCREW, TAPPING	2	2	2			
6	90105–08230	BOLT, FLANGE	1	1	1			
7	90119–06096	BOLT, WITH WASHER	1	1	1			
8	2GB–21720–10	SIDE COVER ASSY 2	1	1	1			
9	90387–08057	.COLLAR	1	1	1			
10	5BE–21749–00	.COLLAR	1	1	1			
11	5TA–21749–00	.COLLAR	1	1	1			
12	1SL–21719–00	.GROMMET	3	3	3			
13	1DX–21746–00	.DAMPER	2	2	2			
14	90105–08230	BOLT, FLANGE	1	1	1			
15	90119–06096	BOLT, WITH WASHER	2	2	2			
16	2GC–217R0–60	SIDE COVER INSERT ASSY. 3	1	1	1			
	2GC–21730–00	SIDE COVER ASSY 3 (WO/GRAPHIC)	1	1	1			AP
17	17D–21749–00	.COLLAR	2	2	2			
18	90387–11009	.COLLAR	1	1	1			
19	90387–06372	.COLLAR	1	1	1			
20	1SL–21748–00	.COLLAR	1	1	1			
21	90480–10068	.GROMMET	1	1	1			
22	2GC–217S0–60	SIDE COVER INSERT ASSY. 4	1	1	1			
	2GC–21740–00	SIDE COVER ASSY 4 (WO/GRAPHIC)	1	1	1			AP
23	17D–21749–00	.COLLAR	2	2	2			
24	90387–11009	.COLLAR	1	1	1			
25	90387–06372	.COLLAR	1	1	1			

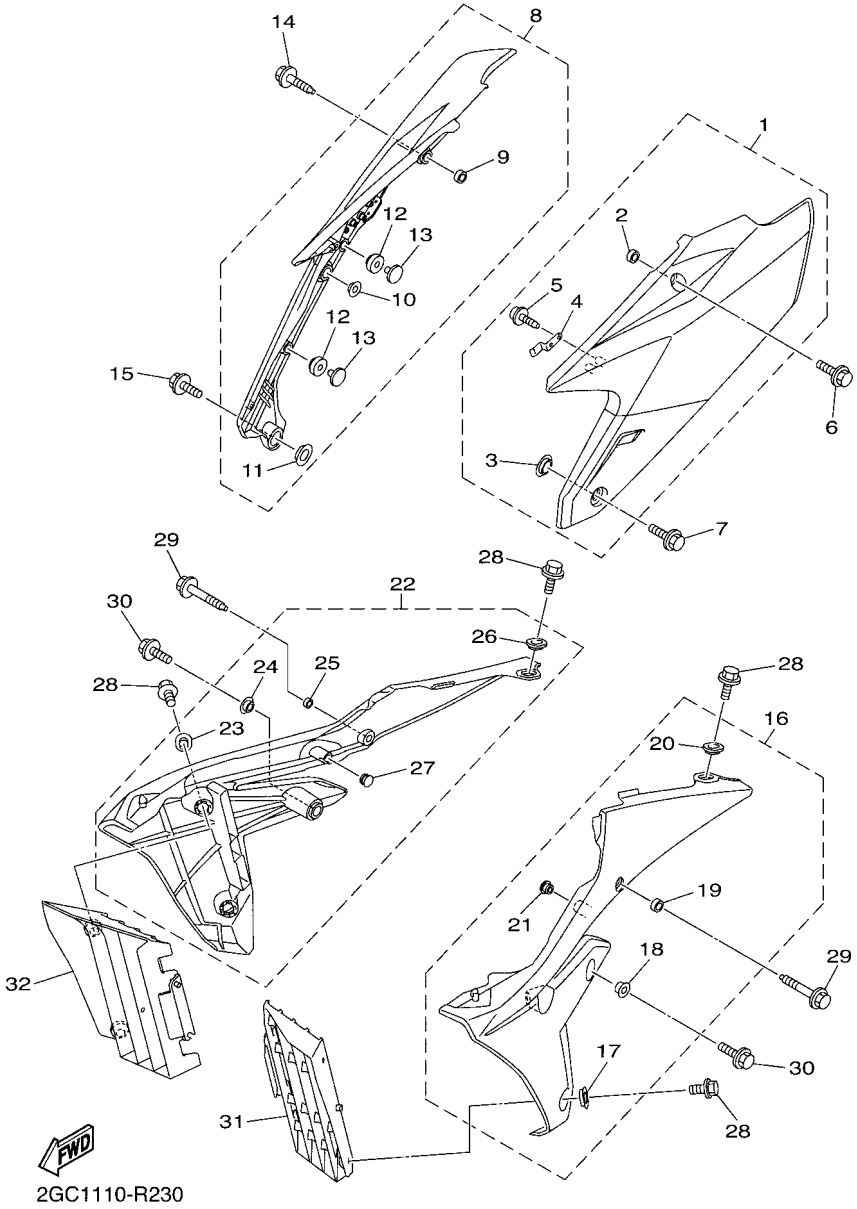

FIG. 23 SIDE COVER

REF. NO.	PART NO.	DESCRIPTION	2GC7	2GC8	2GC9			REMARKS
26	1SL–21748–00	.COLLAR	1	1	1			
27	90480–10068	.GROMMET	1	1	1			
28	90105–06064	BOLT, FLANGE	6	6	6			
29	90105–06179	BOLT, FLANGE	2	2	2			
30	90105–06203	BOLT, FLANGE	2	2	2			
31	1SL–2172A–00	PANEL 1	1	1	1			
32	1SL–2172F–00	PANEL 2	1	1	1			

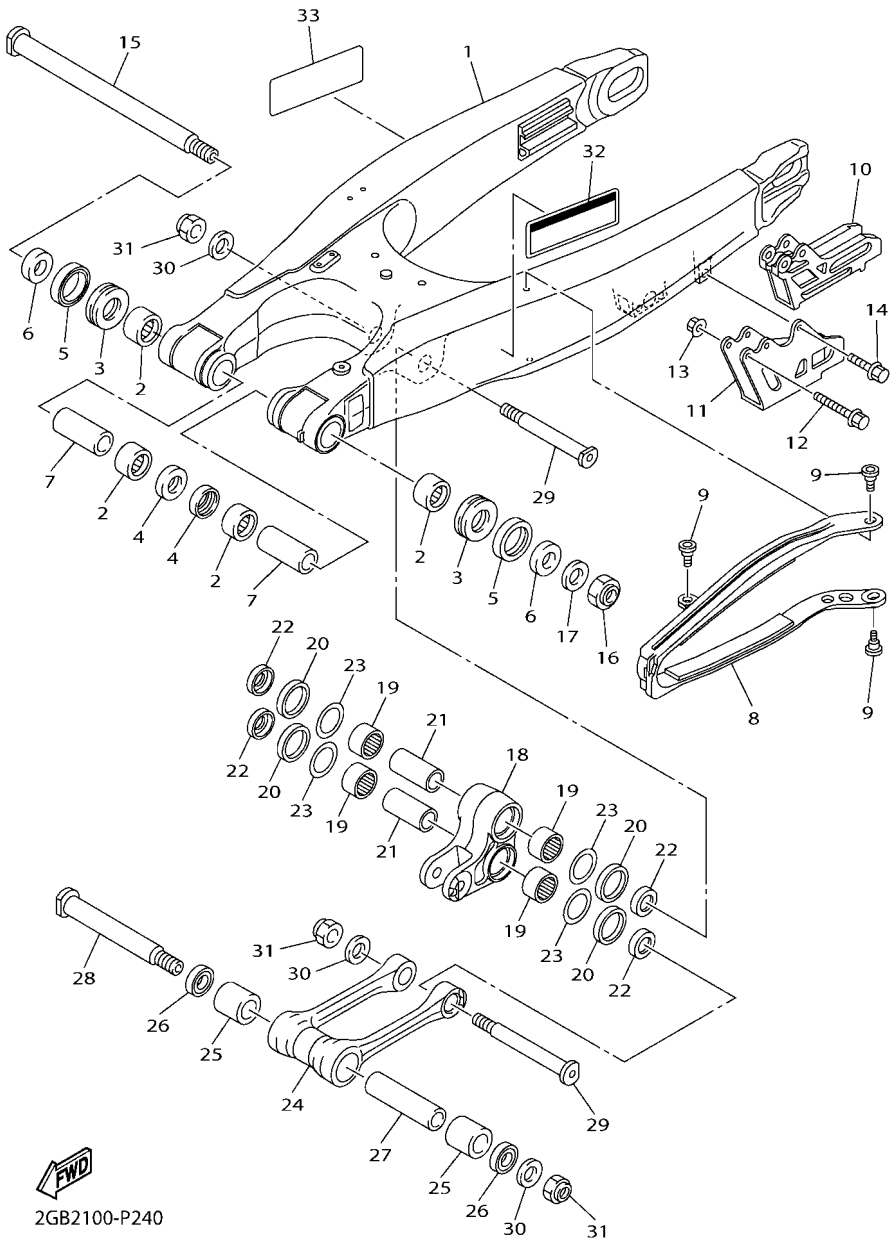

FIG. 24 REAR ARM

REF. NO.	PART NO.	DESCRIPTION	2GC7	2GC8	2GC9			REMARKS
1	1SL–22110–01	REAR ARM COMP.	1	1	1			
2	93317–22262	BEARING	4	4	4			
3	93342–22217	BEARING	2	2	2			
4	93106–22002	OIL SEAL	2	2	2			
5	93109–28043	OIL SEAL	2	2	2			
6	90387–17016	COLLAR	2	2	2			
7	90387–1714S	COLLAR	2	2	2			
8	34P–22151–01	SEAL, GUARD	1	1	1			
9	1C3–22969–90	SCREW, 1	3	3	3			
10	2S2–22199–70	SUPPORT, CHAIN	1	1	1			
11	2S2–22128–70	COVER, THRUST 1	1	1	1			
12	90105–06104	BOLT, FLANGE	2	2	2			
13	95702–06500	NUT, FLANGE	2	2	2			
14	90105–06105	BOLT, FLANGE	1	1	1			
15	33D–22141–00	SHAFT, PIVOT	1	1	1			
16	90185–16002	NUT, SELF-LOCKING	1	1	1			
17	90201–16018	WASHER, PLATE	1	1	1			
18	17D–2217A–00	ARM, RELAY	1	1	1			
19	93315–32166	BEARING	4	4	4			
20	93109–25001	OIL SEAL	4	4	4			
21	90387–16026	COLLAR	2	2	2			
22	90209–16011	WASHER	4	4	4			
23	90201–21014	WASHER, PLATE	4	4	4			
24	33D–2217F–00	ROD, CONNECTING 1	1	1	1			
25	93315–32166	BEARING	2	2	2			
26	93109–21001	OIL SEAL	2	2	2			
27	90387–14016	COLLAR	1	1	1			

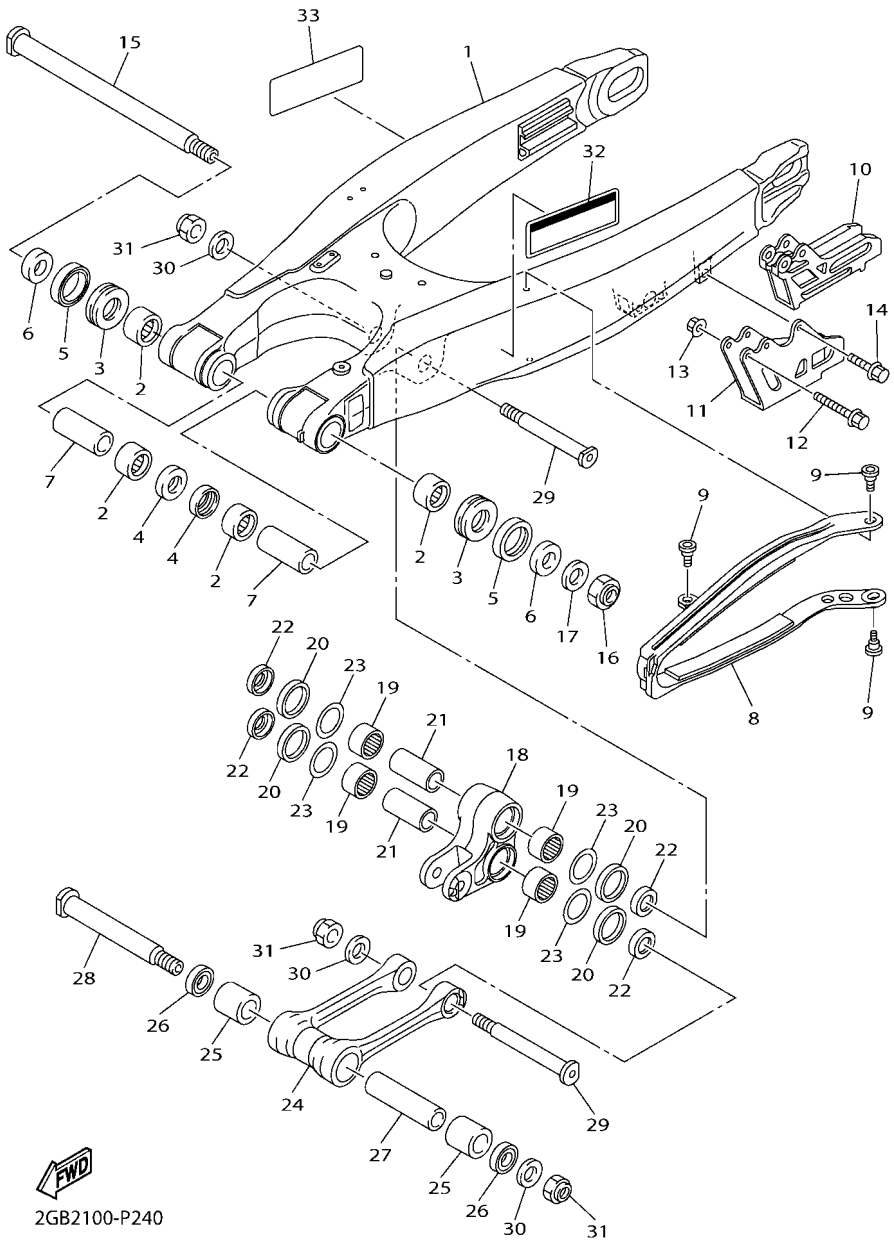

FIG. 24 REAR ARM

REF. NO.	PART NO.	DESCRIPTION	2GC7	2GC8	2GC9			REMARKS
28	5XC–22121–91	SHAFT 1	1	1	1			
29	34P–22122–00	SHAFT 2	2	2	2			
30	90201–14020	WASHER, PLATE	3	3	3			
31	90185–14010	NUT, SELF-LOCKING	3	3	3			
32	3RV–21668–A0	LABEL, TIRE	1		1			
33	3RV–21668–B0	LABEL, TIRE	1					

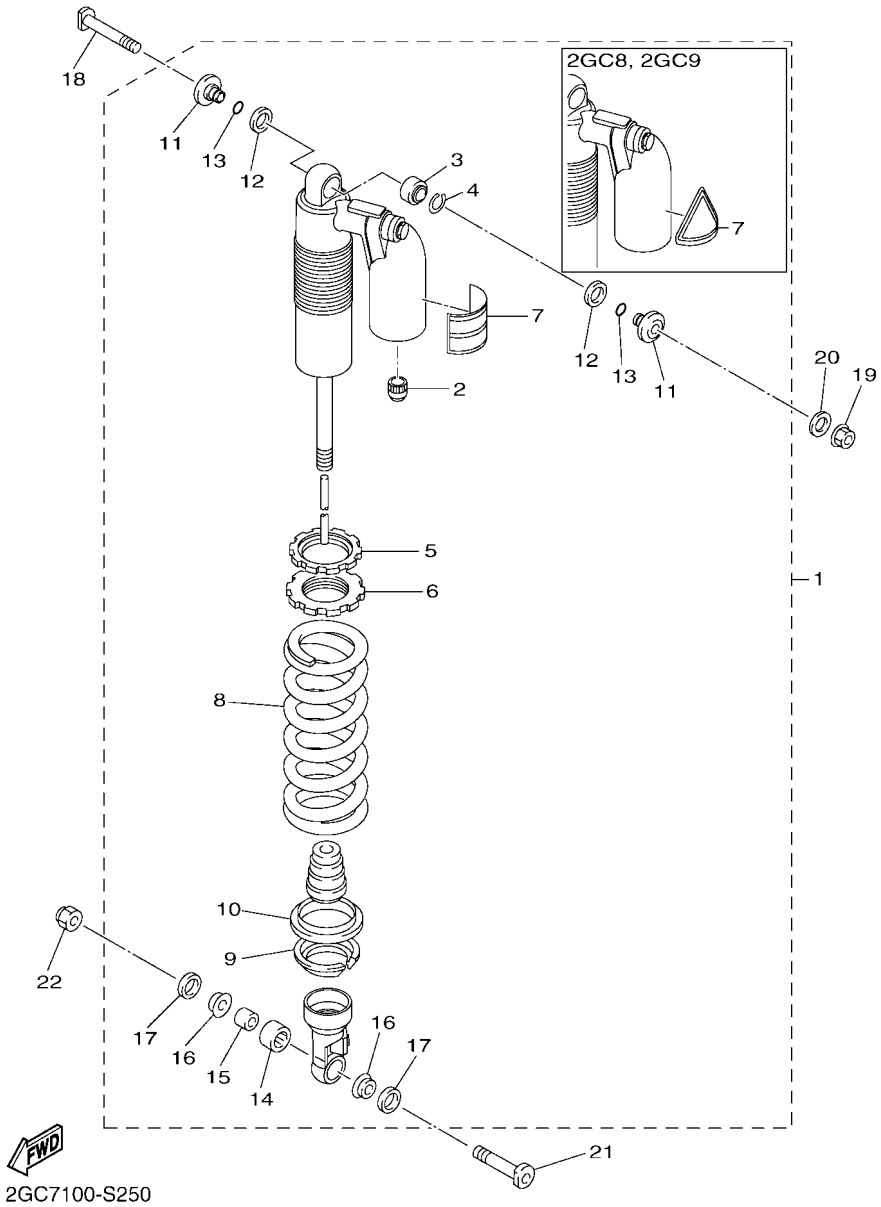

FIG. 25 REAR SUSPENSION

REF. NO.	PART NO.	DESCRIPTION	2GC7	2GC8	2GC9			REMARKS
1	2GC–22200–10	SHOCK ABSORBER ASSY, REAR	1					
	2GC–22200–20	SHOCK ABSORBER ASSY, REAR		1	1			
2	509–23184–L0	.CAP, AIR VALVE	1	1	1			
3	4JX–22226–00	.BUSH, SHOCK ABSORBER LOWER	1	1	1			
4	5DH–23183–00	.CIRCLIP	1	1	1			
5	33D–22234–00	.GUIDE, SPRING 3	1	1	1			
6	1SL–22213–00	.SEAT, SPRING UPPER	1	1	1			
7	4AA–22259–70	.LABEL, WARNING	1					
	4AA–22259–40	.LABEL, WARNING		1	1			
8	1SL–22212–20	.SPRING (K=56 BLUE)	1	1	1			STD
9	2GB–22214–00	.GUIDE, SPRING 1	1	1	1			
10	33D–22224–00	.GUIDE, SPRING 2	1	1	1			
11	1C3–22253–50	.COLLAR, DISTANCE	2	2	2			
12	3JE–22475–00	.SEAL, DUST	2	2	2			
13	4EW–22474–00	.SEAL, RING	2	2	2			
14	5UN–22176–00	.BEARING	1	1	1			
15	5MV–22184–00	.BUSH	1	1	1			
16	1C3–22253–L1	.COLLAR, DISTANCE	2	2	2			
17	5NY–22475–00	.SEAL, DUST	2	2	2			
18	5XE–22242–00	BOLT 2	1	1	1			
19	95602–10200	NUT, U FLANGE	1	1	1			
20	92902–10200	WASHER	1	1	1			
21	5NY–22241–00	BOLT 1	1	1	1			
22	90185–10012	NUT, SELF-LOCKING	1	1	1			

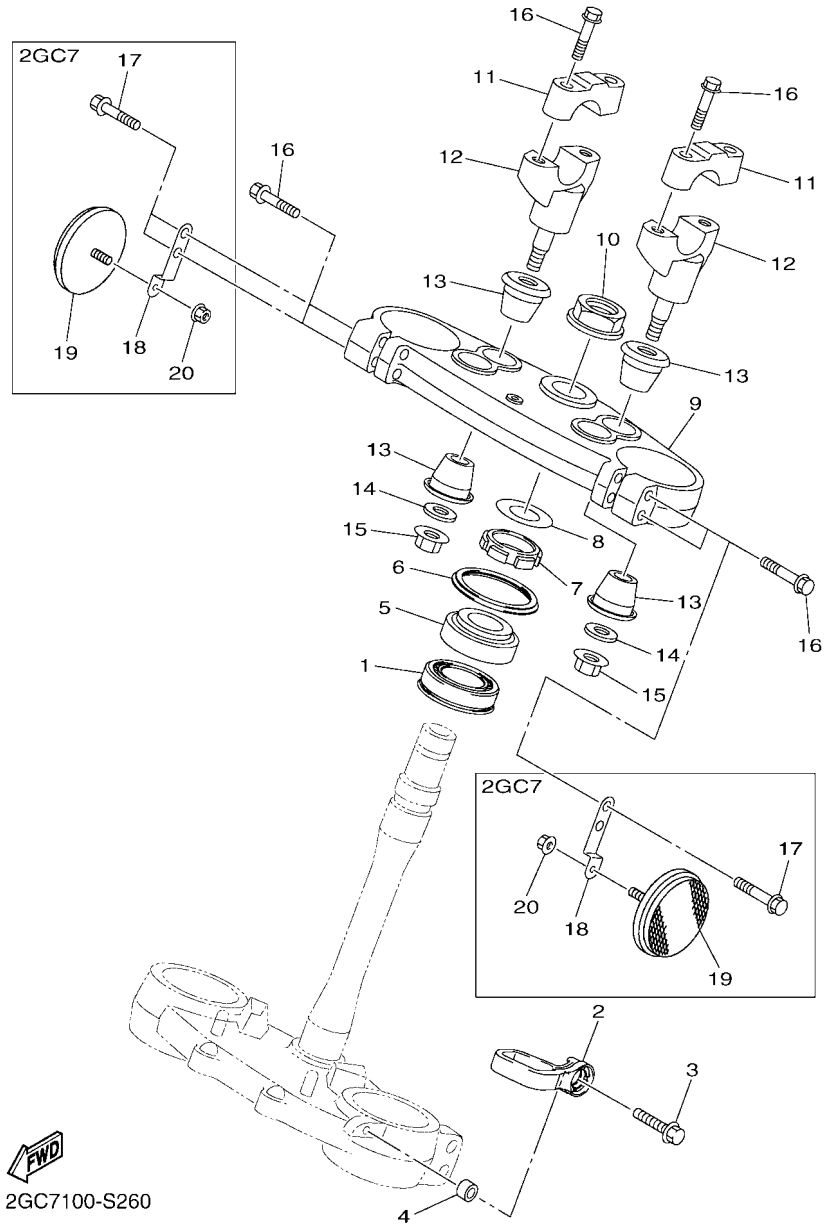

FIG. 26 STEERING

REF. NO.	PART NO.	DESCRIPTION	2GC7	2GC8	2GC9			REMARKS
1	93332–00081	BEARING	1	1	1			
2	17D–23389–50	GUIDE, CABLE	1	1	1			
3	90105–06170	BOLT, FLANGE	1	1	1			
4	90387–06105	COLLAR	1	1	1			
5	93332–00068	BEARING	1	1	1			
6	17D–23416–50	COVER, BALL RACE 2	1	1	1			
7	90179–28015	NUT	1	1	1			
8	90201–28020	WASHER, PLATE	1	1	1			
9	1SL–23435–00	CROWN, HANDLE	1	1	1			
10	90179–24004	NUT	1	1	1			
11	18P–23441–00	HOLDER, HANDLE UPPER	2	2	2			
12	1SL–23442–00	HOLDER, HANDLE LOWER	2	2	2			
13	1SL–23434–00	HOLDER, DAMPER	4	4	4			
14	90201–10035	WASHER, PLATE	2	2	2			
15	95602–10200	NUT, U FLANGE	2	2	2			
16	90105–08154	BOLT, FLANGE	4	8	8			
17	90105–08134	BOLT, FLANGE	4					
18	2GB–2317E–U0	STAY 1	2					
19	4AG–85111–00	REFLECTOR, FRONT 1	2					
20	95602–06200	NUT, SELF-LOCKING	2					

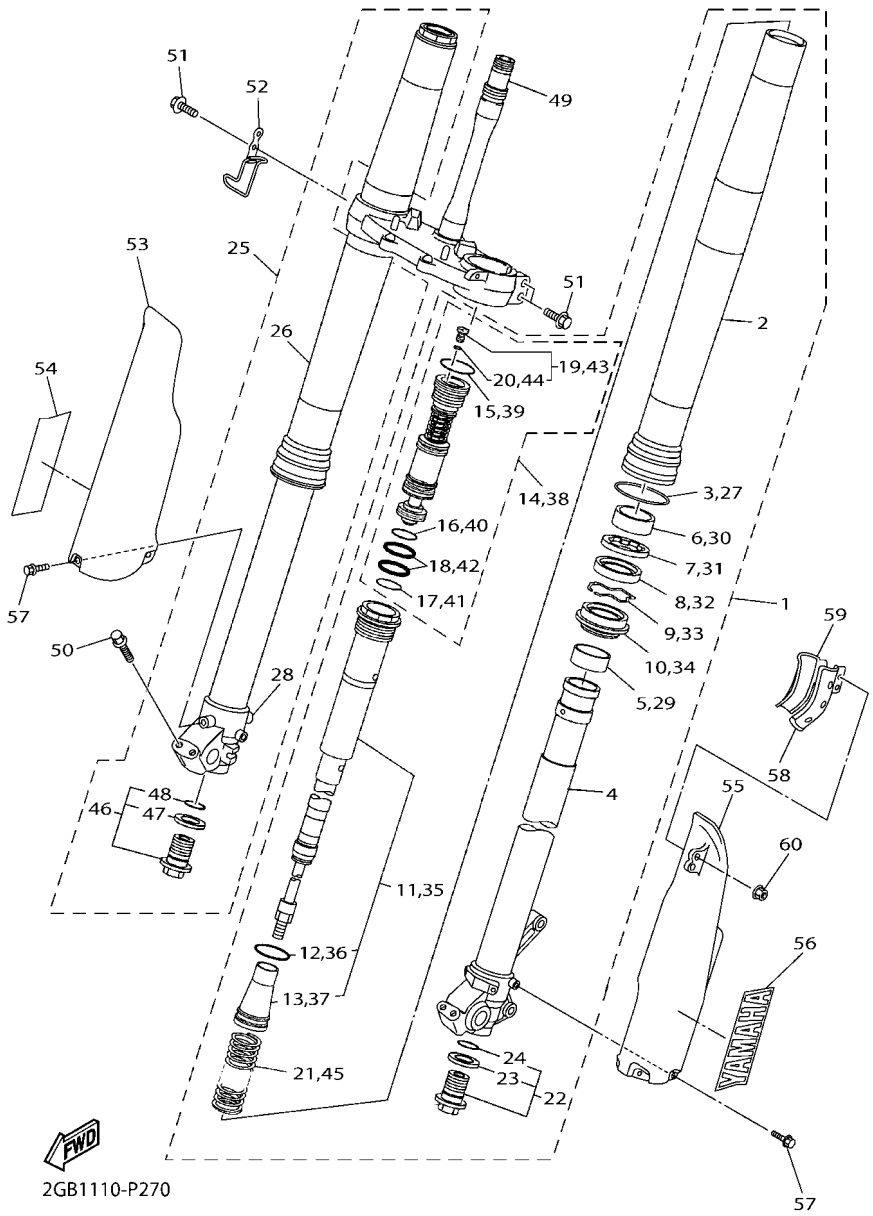

FIG. 27 FRONT FORK

REF. NO.	PART NO.	DESCRIPTION	2GC7	2GC8	2GC9			REMARKS
1	2GC–23102–00	FRONT FORK ASSY (L.H)	1	1	1			
2	33D–23136–00	.TUBE, OUTER	1	1	1			
3	17D–23153–00	.RING, SNAP	1	1	1			
4	1DX–23120–00	.INNER TUBE COMP.2	1	1	1			
5	5XE–23171–L0	.PISTON, FRONT FORK	1	1	1			
6	5XE–23125–L0	.METAL, SLIDE 1	1	1	1			
7	5XC–23146–10	.WASHER, OIL SEAL	1	1	1			
8	17D–23145–00	.OIL SEAL	1	1	1			
9	5XE–23153–L0	.RING, SNAP	1	1	1			
10	5XE–23144–L0	.SEAL, DUST	1	1	1			
11	2GC–23170–00	.CYLINDER COMP., FRONT FORK	1	1	1			
12	1C3–23147–L0	..O-RING	1	1	1			
13	17D–23142–00	..SEAT, SPRING UPPER	1	1	1			
14	2GC–2316A–00	.VALVE COMP.	1	1	1			
15	1C3–23188–L0	..O-RING	1	1	1			
16	1C3–23188–N0	..O-RING	1	1	1			
17	1C3–23188–P0	..O-RING	1	1	1			
18	1AE–23147–00	..O-RING	2	2	2			
19	1C3–23190–L0	..AIR VALVE COMP.	1	1	1			
20	1C3–23188–R0	...O-RING	1	1	1			
21	2GB–23141–40	.SPRING, FRONT FORK	1	1	1			
22	5XC–23111–00	.BOLT, CAP	1	1	1			
23	2HH–23158–L0	..GASKET	1	1	1			
24	276–23114–00	..GASKET	1	1	1			
25	2GC–23103–00	FRONT FORK ASSY (R.H)	1	1	1			
26	33D–23136–00	.TUBE, OUTER	1	1	1			
27	17D–23153–00	.RING, SNAP	1	1	1			

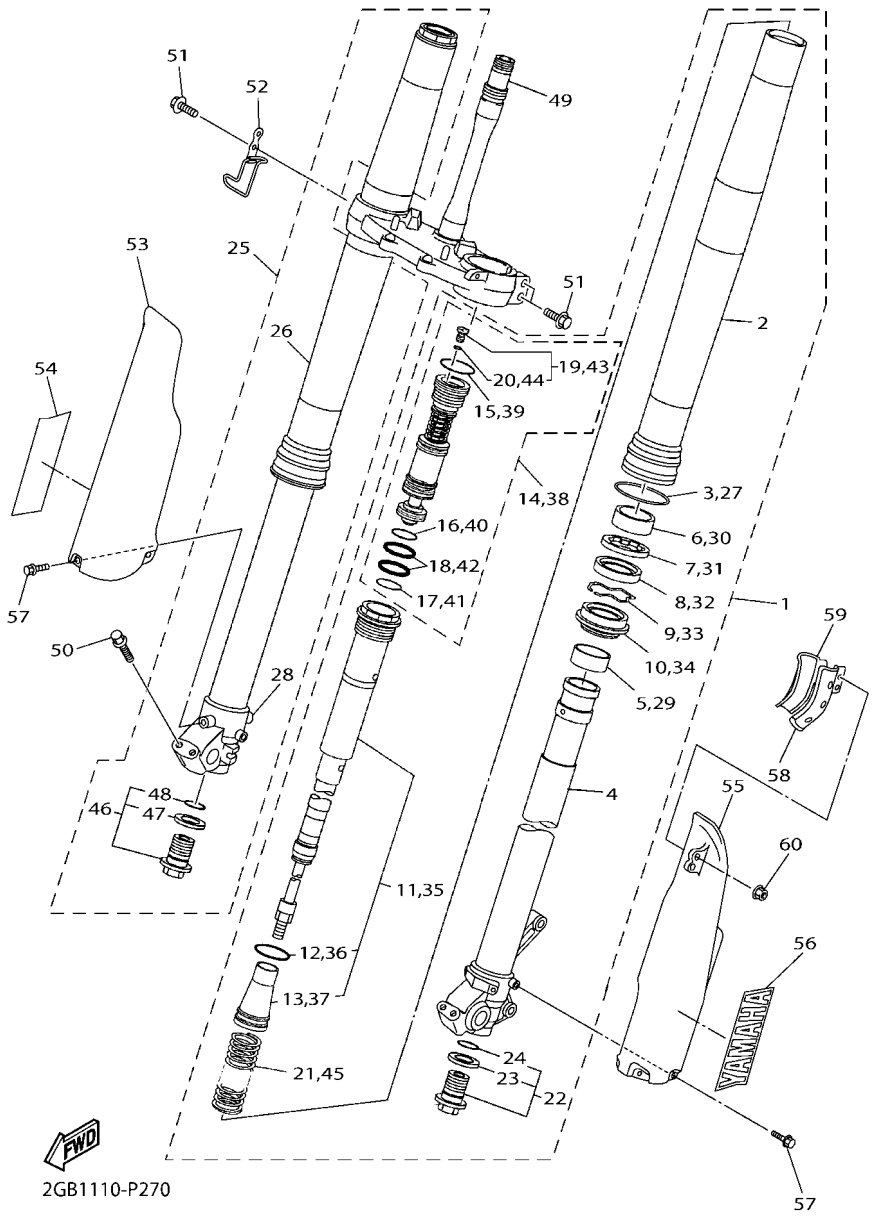

FIG. 27 FRONT FORK

REF. NO.	PART NO.	DESCRIPTION	2GC7	2GC8	2GC9			REMARKS
28	1DX–23110–00	.INNER TUBE COMP.1	1	1	1			
29	5XE–23171–L0	.PISTON, FRONT FORK	1	1	1			
30	5XE–23125–L0	.METAL, SLIDE 1	1	1	1			
31	5XC–23146–10	.WASHER, OIL SEAL	1	1	1			
32	17D–23145–00	.OIL SEAL	1	1	1			
33	5XE–23153–L0	.RING, SNAP	1	1	1			
34	5XE–23144–L0	.SEAL, DUST	1	1	1			
35	2GC–23170–00	.CYLINDER COMP., FRONT FORK	1	1	1			
36	1C3–23147–L0	..O-RING	1	1	1			
37	17D–23142–00	..SEAT, SPRING UPPER	1	1	1			
38	2GC–2316A–00	.VALVE COMP.	1	1	1			
39	1C3–23188–L0	..O-RING	1	1	1			
40	1C3–23188–N0	..O-RING	1	1	1			
41	1C3–23188–P0	..O-RING	1	1	1			
42	1AE–23147–00	..O-RING	2	2	2			
43	1C3–23190–L0	..AIR VALVE COMP.	1	1	1			
44	1C3–23188–R0	...O-RING	1	1	1			
45	2GB–23141–40	.SPRING, FRONT FORK	1	1	1			
46	5XC–23111–00	.BOLT, CAP	1	1	1			
47	2HH–23158–L0	..GASKET	1	1	1			
48	276–23114–00	..GASKET	1	1	1			
49	33D–23340–10	UNDER BRACKET COMP.	1	1	1			
50	90105–08134	BOLT, FLANGE	4	4	4			
51	90105–08154	BOLT, FLANGE	4	4	4			
52	2GB–23525–00	GUIDE	1	1	1			
53	5TJ–2315J–C0	PROTECTOR 2	1	1	1			
54	4XL–2153A–10	EMBLEM, YAMAHA	1	1	1			

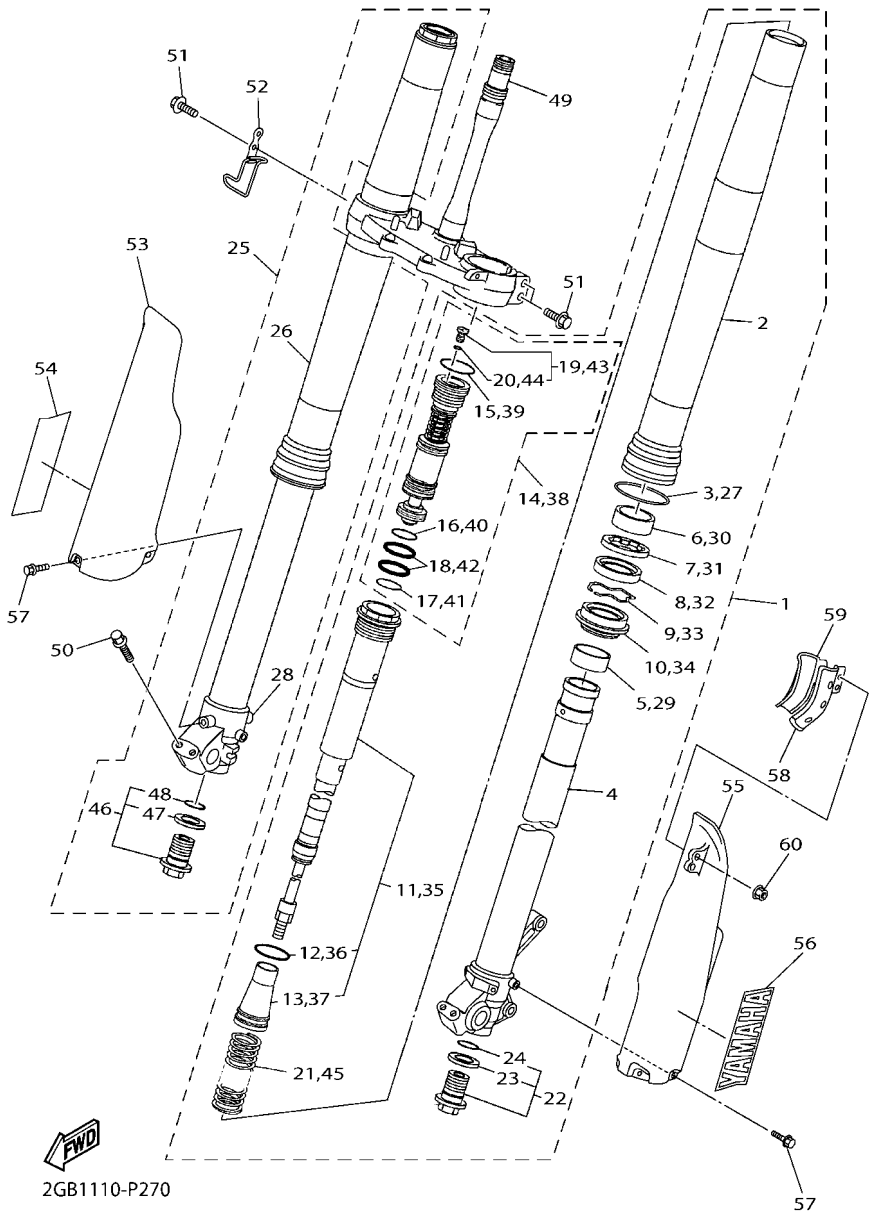

FIG. 27 FRONT FORK

REF. NO.	PART NO.	DESCRIPTION	2GC7	2GC8	2GC9			REMARKS
55	1C3–2315H–10	PROTECTOR 1	1	1	1			
56	4XL–2153A–10	EMBLEM, YAMAHA	1	1	1			
57	3SP–23356–L0	BOLT 2	6	6	6			
58	5XC–23466–L0	CLAMP	1	1	1			
59	5XC–23467–L0	CLAMP	1	1	1			
60	95702–06500	NUT, FLANGE	2	2	2			

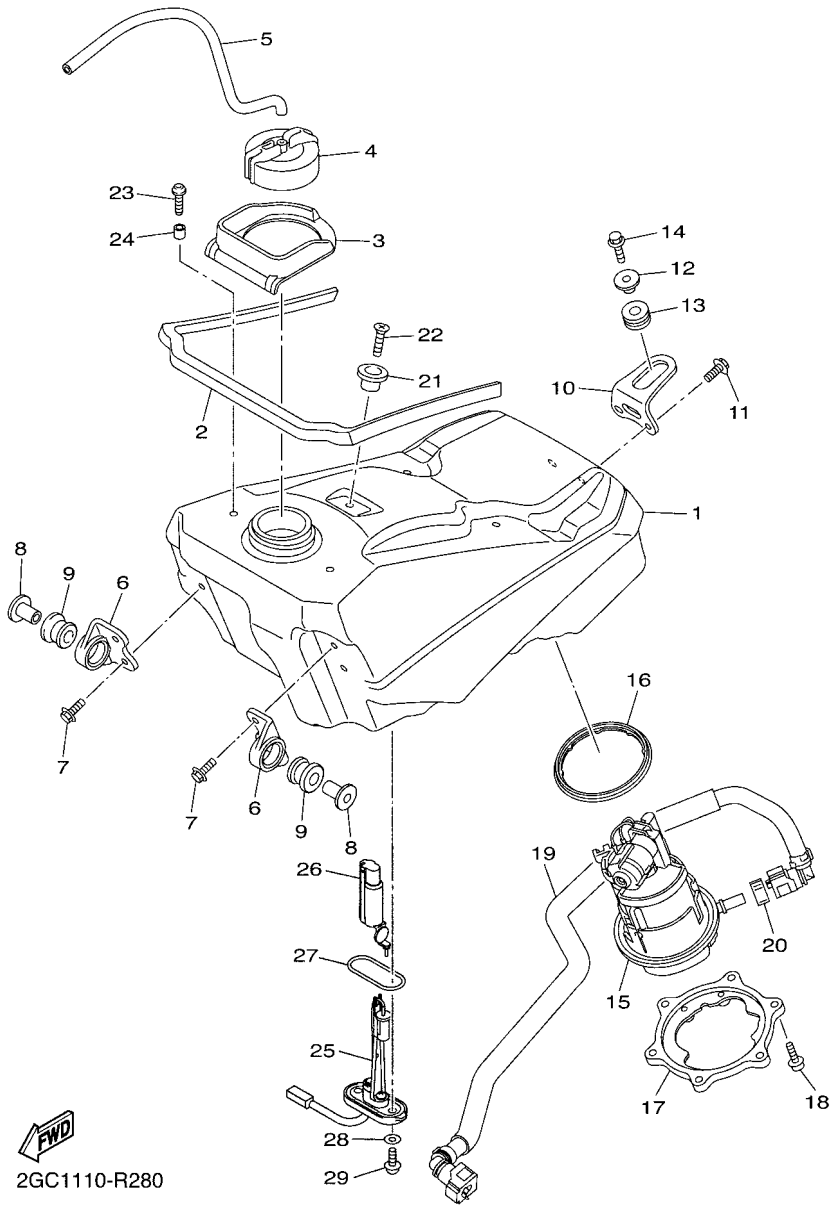

FIG. 28 FUEL TANK

REF. NO.	PART NO.	DESCRIPTION	2GC7	2GC8	2GC9			REMARKS
1	2GB–24110–00	FUEL TANK COMP.	1					
	2GB–24110–10	FUEL TANK COMP.		1	1			
2	1S4–2414J–00	DAMPER, PLATE 2	3	3	3			
3	1SL–24188–00	MOLD, FUEL TANK	1	1	1			
4	1SL–24610–01	CAP ASSY	1	1	1			
5	90445–09008	HOSE (L470)	1	1	1			
6	1SL–24115–00	STAY, FUEL TANK 1	2	2	2			
7	90105–06170	BOLT, FLANGE	4	4	4			
8	90387–06091	COLLAR	2	2	2			
9	90480–18549	GROMMET	2	2	2			
10	1SL–2419A–00	HOLDER	1	1	1			
11	90105–06170	BOLT, FLANGE	2	2	2			
12	90387–066Y6	COLLAR	1	1	1			
13	90480–10289	GROMMET	1	1	1			
14	95022–06020	BOLT, FLANGE	1	1	1			
15	33D–13907–01	FUEL PUMP COMP.	1	1	1			
16	33D–24486–00	O-RING	1	1	1			
17	33D–24491–00	BRACKET, FUEL PUMP	1	1	1			
18	90110–05058	BOLT, HEXAGON SOCKET HEAD	6	6	6			
19	1SL–13971–01	PIPE, FUEL 1	1	1	1			
20	33D–24135–00	CLAMP 1	1	1	1			
21	4EW–2412F–00	BRACKET, SEAT	1	1	1			
22	98707–06025	SCREW, FLAT HEAD	1	1	1			
23	90111–06149	BOLT,HEX. SOCKET BUTTON	2	2	2			
24	90387–06284	COLLAR	2	2	2			
25	2GB–85752–00	SENDER UNIT ASSY, FUEL METER	1	1	1			
26	1DX–24474–00	COVER	1	1	1			

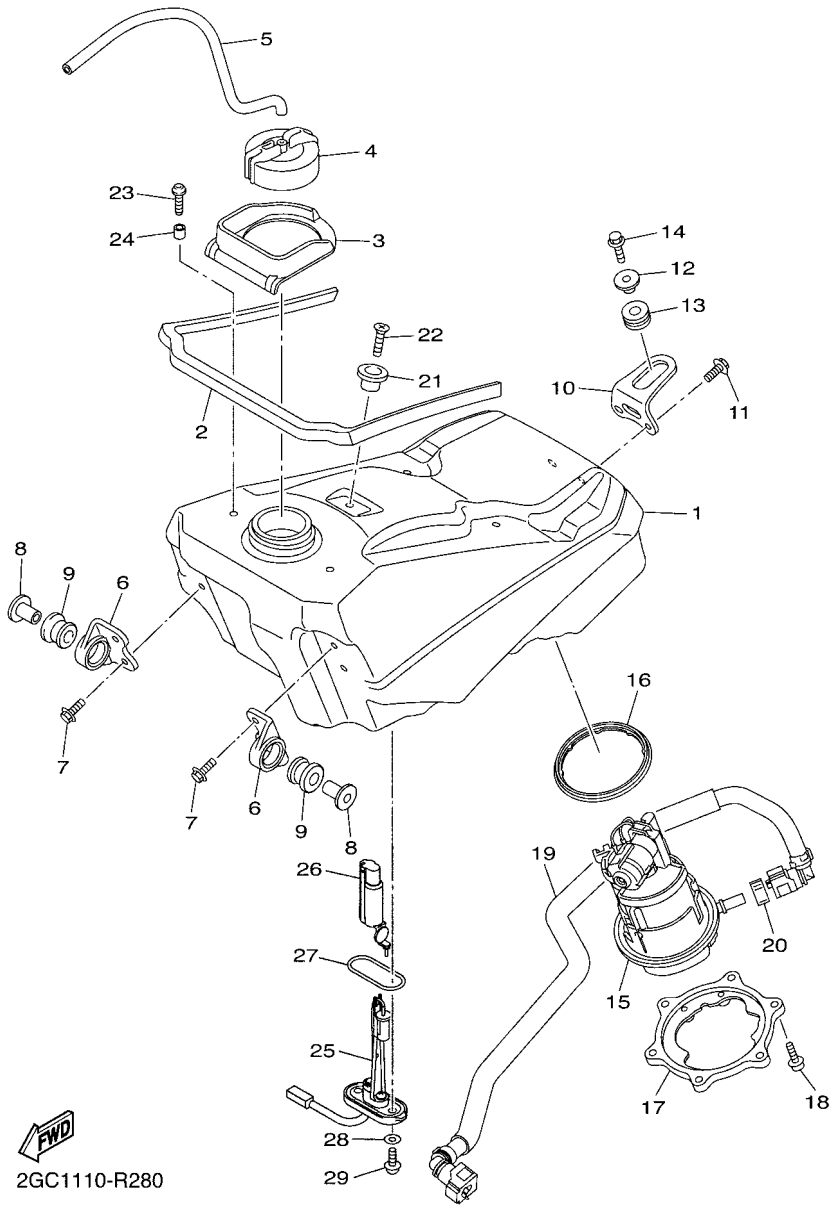

FIG. 28 FUEL TANK

REF. NO.	PART NO.	DESCRIPTION	2GC7	2GC8	2GC9			REMARKS
27	1DX–85753–00	GASKET, SENDER UNIT	1	1	1			
28	90202–05193	WASHER, PLATE	2	2	2			
29	90149–06108	SCREW	2	2	2			

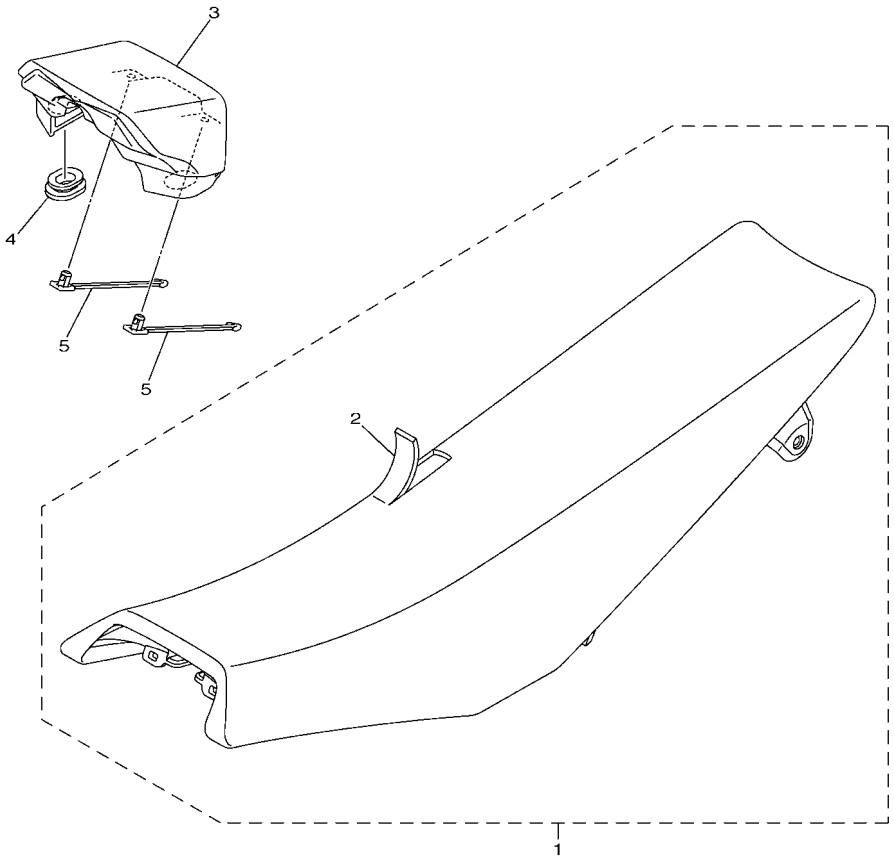

1SL1110-N270

FIG. 29 SEAT

REF. NO.	PART NO.	DESCRIPTION	2GC7	2GC8	2GC9			REMARKS
1	1SL–24710–00	SINGLE SEAT ASSY	1	1	1			
2	1SL–2470F–00	.SEAT COVER COMP.	1	1	1			
3	1SL–2464E–00	COVER, CAP	1	1	1			
4	1SL–24742–00	GROMMET	2	2	2			
5	1SL–24734–00	BAND, SEAT	2	2	2			

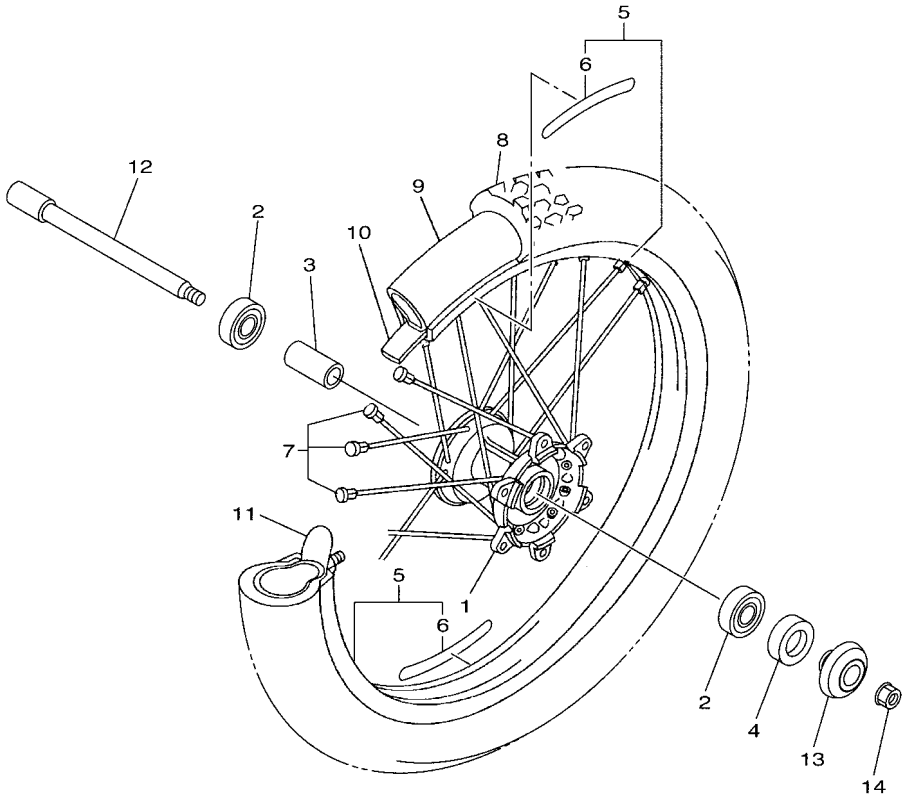

2GC5700-R300

FIG. 30 FRONT WHEEL

REF. NO.	PART NO.	DESCRIPTION	2GC7	2GC8	2GC9			REMARKS
1	5NG–25111–50	HUB, FRONT	1	1	1			
2	93306–90409	BEARING	2	2	2			
3	5NY–25117–00	SPACER, BEARING	1	1	1			
4	93102–26468	OIL SEAL	1	1	1			
5	94416–21048	RIM (1.60-21)	1	1	1			
6	17D–2531B–00	.EMBLEM, WHEEL	2	2	2			
7	5NY–25104–00	SPOKE SET, FRONT	1	1	1			
8	94108–21034	TIRE (80/100-21 51M MX51FA)	1					UR DUNLOP
	*	TIRE (90/90-21 M/C 54M M+S)		1	1			UR LM METZELER
9	94227–21101	TUBE (80/100-21 M/C TR4)	1					UR DUNLOP
	*	TUBE (80/100-21)		1	1			UR LM METZELER
10	94309–21161	BAND, RIM (22-21)	1					UR DUNLOP
	*	BAND, RIM (80/100-21)		1	1			UR LM METZELER
11	5SF–25394–00	SPACER, BEAD	1	1	1			
12	2GB–25181–00	AXLE, WHEEL	1	1	1			
13	5TJ–2510C–80	COLLAR ASSY.	1	1	1			
14	90179–16011	NUT	1	1	1			

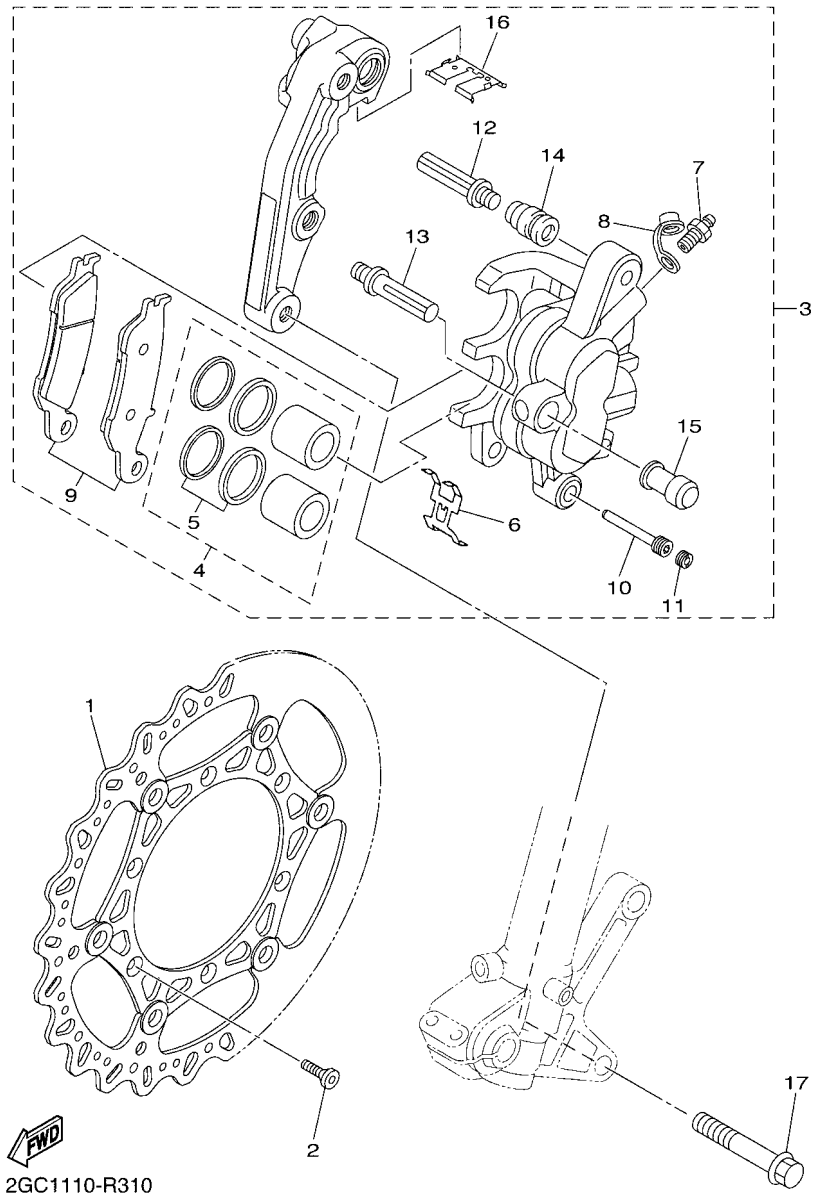

2GC1110-R310

FIG. 31 FRONT BRAKE CALIPER

REF. NO.	PART NO.	DESCRIPTION	2GC7	2GC8	2GC9			REMARKS
1	B11–2581T–00	DISK BRAKE ASSY	1	1	1			
2	90151–06051	SCREW, COUNTERSUNK	6	6	6			
3	2GC–2580T–00	CALIPER ASSY (LEFT)	1	1	1			
4	5XC–25802–00	.PISTON ASSY, CALIPER	1	1	1			
5	5KM–25803–10	..CALIPER SEAL KIT	1	1	1			
6	5DH–25919–00	.SUPPORT, PAD	1	1	1			
7	1UY–25824–51	.SCREW, BLEED	1	1	1			
8	1UY–25825–51	.CAP	1	1	1			
9	B29–25805–00	.BRAKE PAD KIT	1	1	1			
10	5DH–25933–00	.PIN, PAD	1	1	1			
11	5DH–25916–00	.PLUG	1	1	1			
12	3SP–25926–51	.BOLT	1	1	1			
13	3SP–25914–51	.PIN, SLIDE	1	1	1			
14	3JD–25917–00	.BOOT, CALIPER	1	1	1			
15	1UY–25937–51	.BOOT 2	1	1	1			
16	5XC–25849–G0	.RETAINER, CALIPER	1	1	1			
17	90105–08137	BOLT, FLANGE	2	2	2			

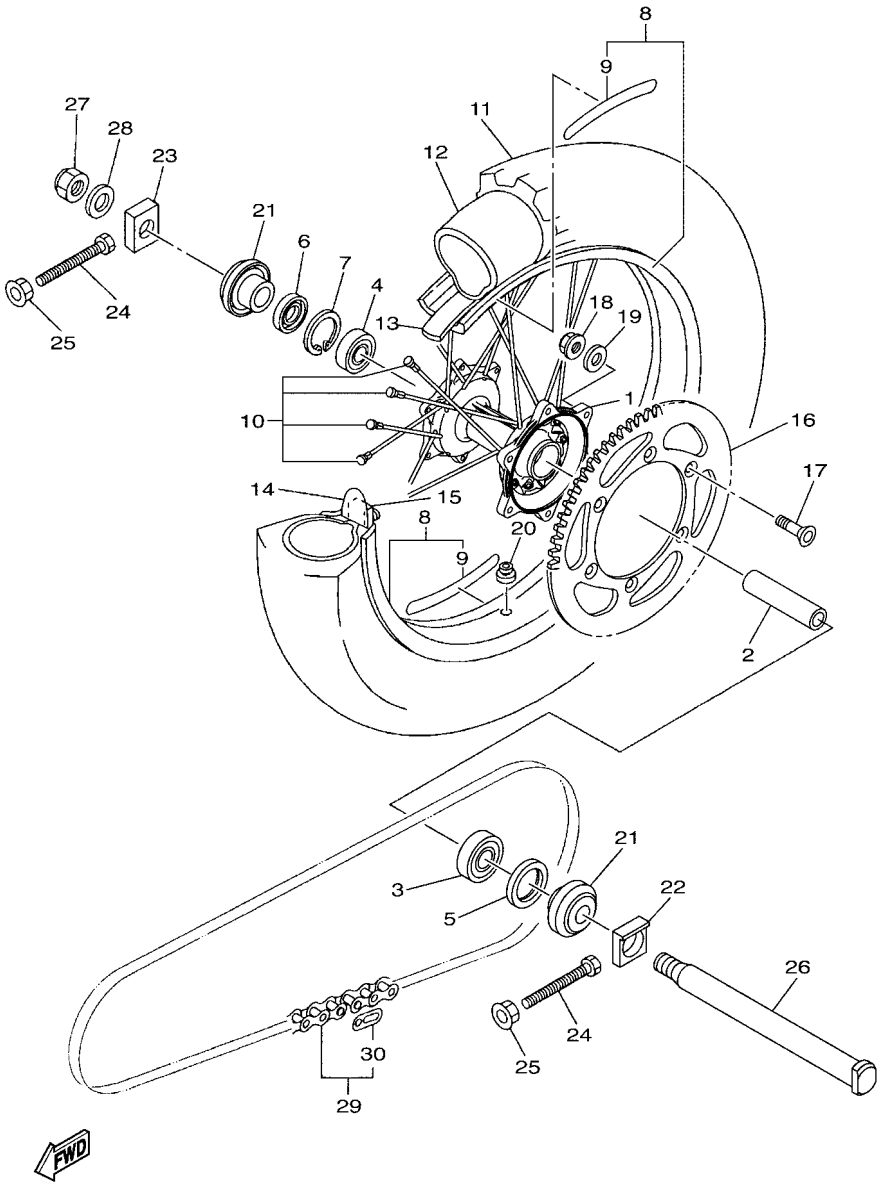

2GC5700-R320

FIG. 32 REAR WHEEL

REF. NO.	PART NO.	DESCRIPTION	2GC7	2GC8	2GC9			REMARKS
1	5ET–25311–00	HUB, REAR	1	1	1			
2	5ET–25317–00	SPACER, BEARING	1	1	1			
3	93306–27212	BEARING	1	1	1			
4	93306–07202	BEARING	1	1	1			
5	93106–30001	OIL SEAL	1	1	1			
6	93106–30045	OIL SEAL	1	1	1			
7	99009–45500	CIRCLIP	1	1	1			
8	94421–18036	RIM (2.15-18)	1	1	1			
9	17D–2531B–00	.EMBLEM, WHEEL	2	2	2			
10	5GS–25304–00	SPOKE SET, REAR	1	1	1			
11	94112–18034	TIRE (120/90-18 65M MX51)	1					UR DUNLOP
	*	TIRE (130/90-18 M/C 69M M+S)		1	1			UR LM METZELER
12	94212–18188	TUBE (110-140/80-100-18 M/C)	1					UR DUNLOP
	*	TUBE (120-150/70-90-18 M/C)		1	1			UR LM METZELER
13	94309–18146	BAND, RIM (25-18)	1					UR DUNLOP
	*	BAND, RIM (3.50-18)		1	1			UR LM METZELER
14	3JE–25394–00	SPACER, BEAD	1	1	1			
15	4XM–25364–00	DAMPER	1	1	1			
16	5TJ–25450–80	SPROCKET, DRIVEN (50T)	1	1	1			STD
	5GS–25448–50	SPROCKET, DRIVEN (48T)	1	1	1			AP
	5TJ–25452–80	SPROCKET, DRIVEN (52T)	1	1	1			AP
17	90109–08078	BOLT	6	6	6			
18	90185–08008	NUT, SELF-LOCKING	6	6	6			
19	90201–08048	WASHER, PLATE	6	6	6			
20	90480–08608	GROMMET	1	1	1			
21	1DX–2530S–00	COLLAR ASSY	2	2	2			
22	1C3–25388–H0	PULLER, CHAIN 1	1	1	1			

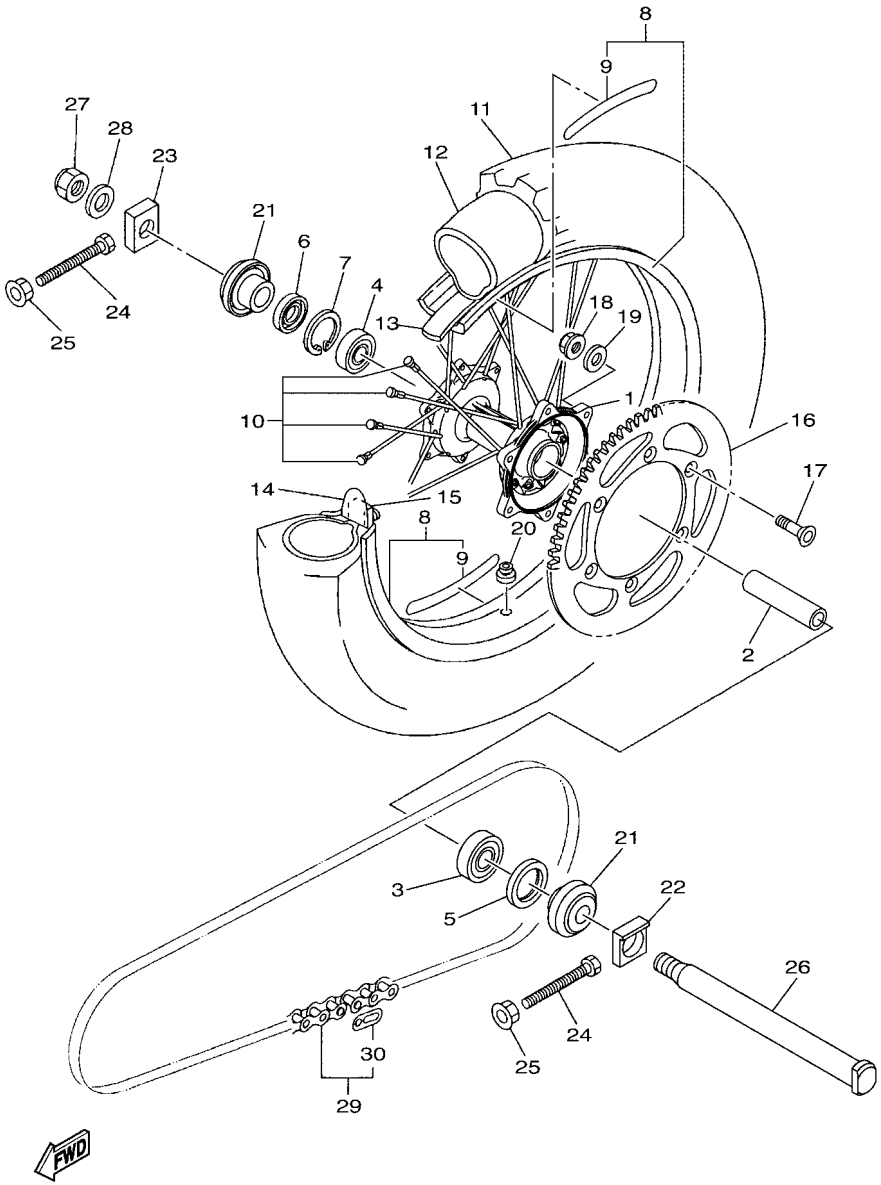

2GC5700-R320

FIG. 32 REAR WHEEL

REF. NO.	PART NO.	DESCRIPTION	2GC7	2GC8	2GC9			REMARKS
23	1C3–25389–H0	PULLER, CHAIN 2	1	1	1			
24	90101–08006	BOLT	2	2	2			
25	90179–08019	NUT	2	2	2			
26	1C3–25381–90	AXLE, WHEEL	1	1	1			
27	90185–20002	NUT, SELF-LOCKING	1	1	1			
28	90201–20020	WASHER, PLATE	1	1	1			
29	9Y58F–39113	CHAIN (DID520VM2-114LL)	1	1	1			
30	94682–42021	.JOINT,CHAIN (DID520VM2Y ZJ)	1	1	1			

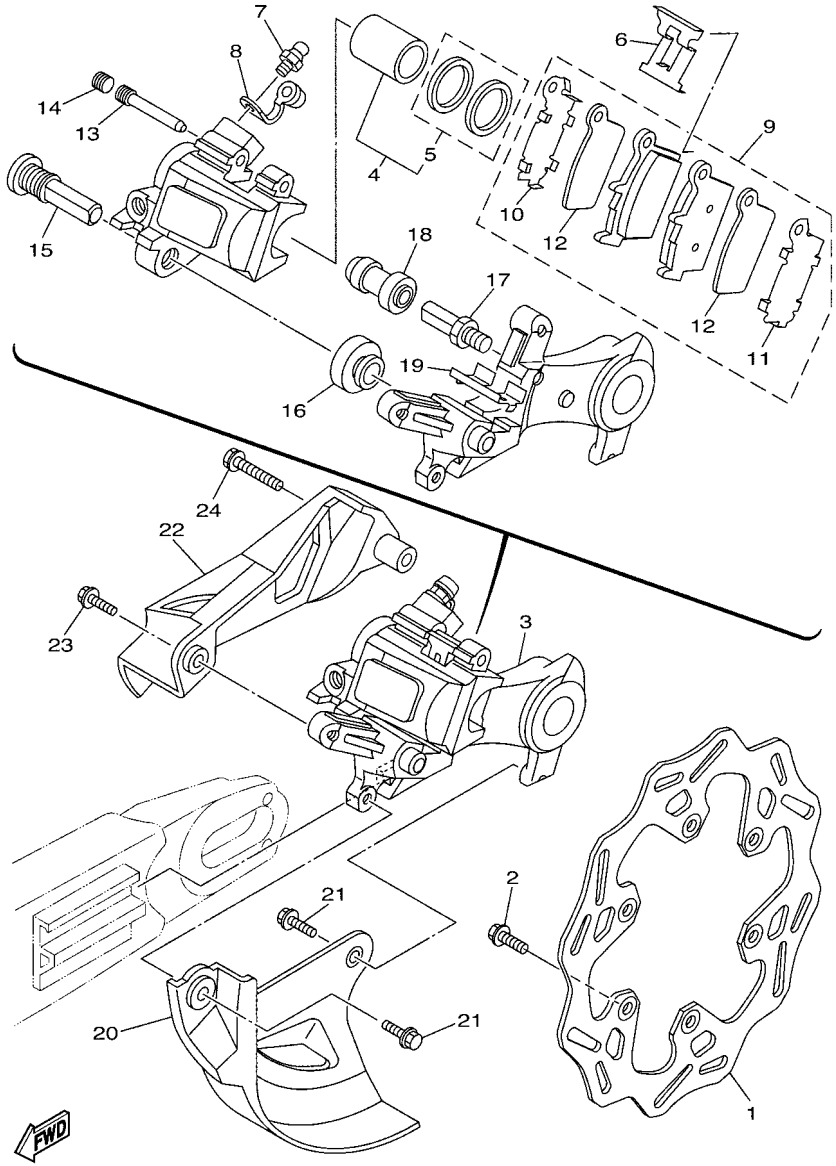

33DD110-M310

FIG. 33 REAR BRAKE CALIPER

REF. NO.	PART NO.	DESCRIPTION	2GC7	2GC8	2GC9			REMARKS
1	B11–2582W–00	DISK, REAR BRAKE 2	1	1	1			
2	90105–06108	BOLT, FLANGE	6	6	6			
3	1C3–2580W–72	CALIPER ASSY, REAR 2	1	1	1			
4	5UN–W0057–50	.PISTON ASSY, CALIPER	1	1	1			
5	5UN–W0047–50	..CALIPER SEAL KIT	1	1	1			
6	5DH–25919–50	.SUPPORT, PAD	1	1	1			
7	1UY–25824–51	.SCREW, BLEED	1	1	1			
8	1UY–25825–51	.CAP	1	1	1			
9	1C3–W0046–B0	.BRAKE PAD KIT 2	1	1	1			
10	5UN–25828–60	..SHIM, CALIPER	1	1	1			
11	5UN–25827–60	..SHIM, CALIPER	1	1	1			
12	5UN–22898–60	..INSULATOR, HEAT	2	2	2			
13	8CR–25924–00	.PIN, PAD	1	1	1			
14	5DH–25916–00	.PLUG	1	1	1			
15	5DH–25914–50	.PIN, SLIDE	1	1	1			
16	3JD–25917–00	.BOOT, CALIPER	1	1	1			
17	5UN–25914–00	.PIN, SLIDE	1	1	1			
18	1UY–25937–51	.BOOT 2	1	1	1			
19	5UN–25913–00	.RETAINER	1	1	1			
20	17D–25718–50	PROTECTOR, DISK BRAKE	1	1	1			
21	90105–06110	BOLT, FLANGE	2	2	2			
22	17D–27491–50	PROTECTOR	1	1	1			
23	90105–06110	BOLT, FLANGE	1	1	1			
24	90105–06111	BOLT, FLANGE	1	1	1			

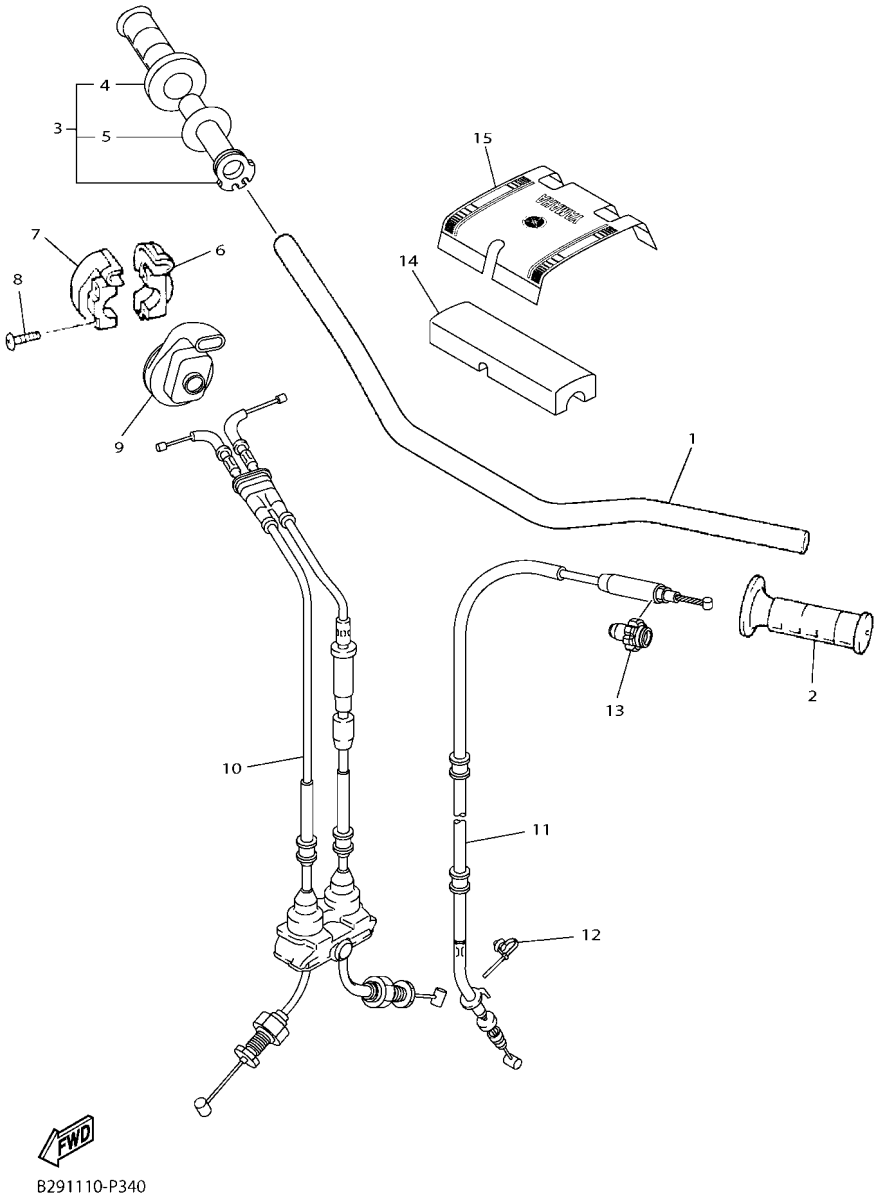

FIG. 34 STEERING HANDLE & CABLE

REF. NO.	PART NO.	DESCRIPTION	2GC7	2GC8	2GC9			REMARKS
1	17D–26111–H0	HANDLEBAR	1	1	1			
2	4GY–26241–00	GRIP	1	1	1			
3	1SL–26240–00	GRIP ASSY	1	1	1			
4	4GY–26242–00	.GRIP (RIGHT)	1	1	1			
5	3Y1–26249–00	.RING, LEAF	1	1	1			
6	5BE–26281–01	CAP, GRIP UPPER	1	1	1			
7	5BE–26282–00	CAP, GRIP UNDER	1	1	1			
8	98507–05020	SCREW, PAN HEAD	2	2	2			
9	5SF–26287–11	COVER, CAP GRIP	1	1	1			
10	1SL–26302–00	THROTTLE CABLE ASSY	1	1	1			
11	2GC–26335–00	CABLE, CLUTCH	1	1	1			
12	90464–31002	CLAMP	1	1	1			
13	1C3–26342–50	BOOT, CABLE	1	1	1			
14	17D–26124–00	PROTECTOR, HANDLEBAR	1	1	1			
15	17D–26143–H0	COVER, HANDLE UPPER 1	1	1	1			

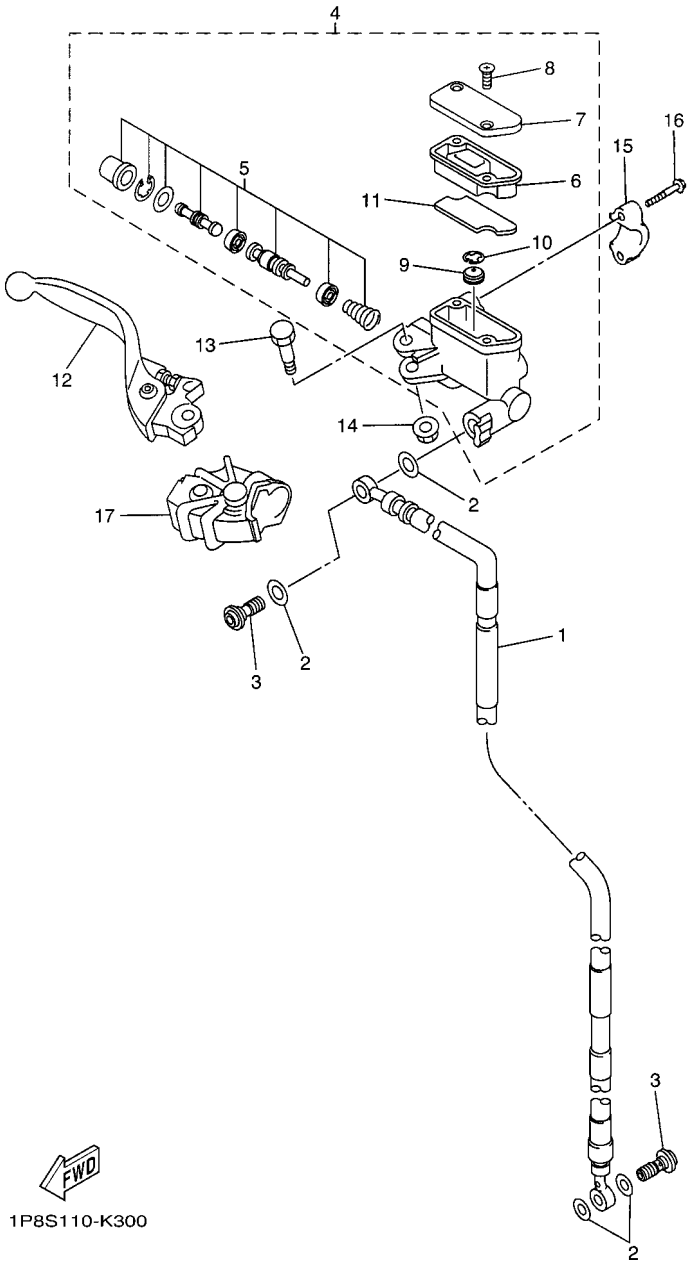

FIG. 35 FRONT MASTER CYLINDER

REF. NO.	PART NO.	DESCRIPTION	2GC7	2GC8	2GC9			REMARKS
1	2GC–25872–00	HOSE, BRAKE 1	1	1	1			
2	90430–10005	GASKET	4	4	4			
3	90401–10172	BOLT, UNION	2	2	2			
4	5XC–W2587–00	MASTER CYLINDER SUB ASSY	1	1	1			
5	5XC–W0041–00	.CYLINDER KIT, MASTER	1	1	1			
6	5XC–25854–G0	.DIAPHRAGM, RESERVOIR	1	1	1			
7	5XC–25852–G0	.CAP, RESERVOIR	1	1	1			
8	98706–04012	.SCREW, FLAT HEAD	2	2	2			
9	5CG–25715–00	.SEPARATOR ASSY	1	1	1			
10	5CG–2585G–00	.CIRCLIP	1	1	1			
11	5XC–25853–G0	.FLOAT, RESERVOIR	1	1	1			
12	5XC–83922–L0	LEVER 2	1	1	1			
13	5MV–2589F–00	BOLT, LEVER	1	1	1			
14	95701–06500	NUT, WITH WASHER	1	1	1			
15	5MV–25867–00	BRACKET, MASTER CYLINDER	1	1	1			
16	5MV–25833–00	BOLT, FITTING	2	2	2			
17	5XC–26372–G0	COVER, HANDLE LEVER 1	1	1	1			

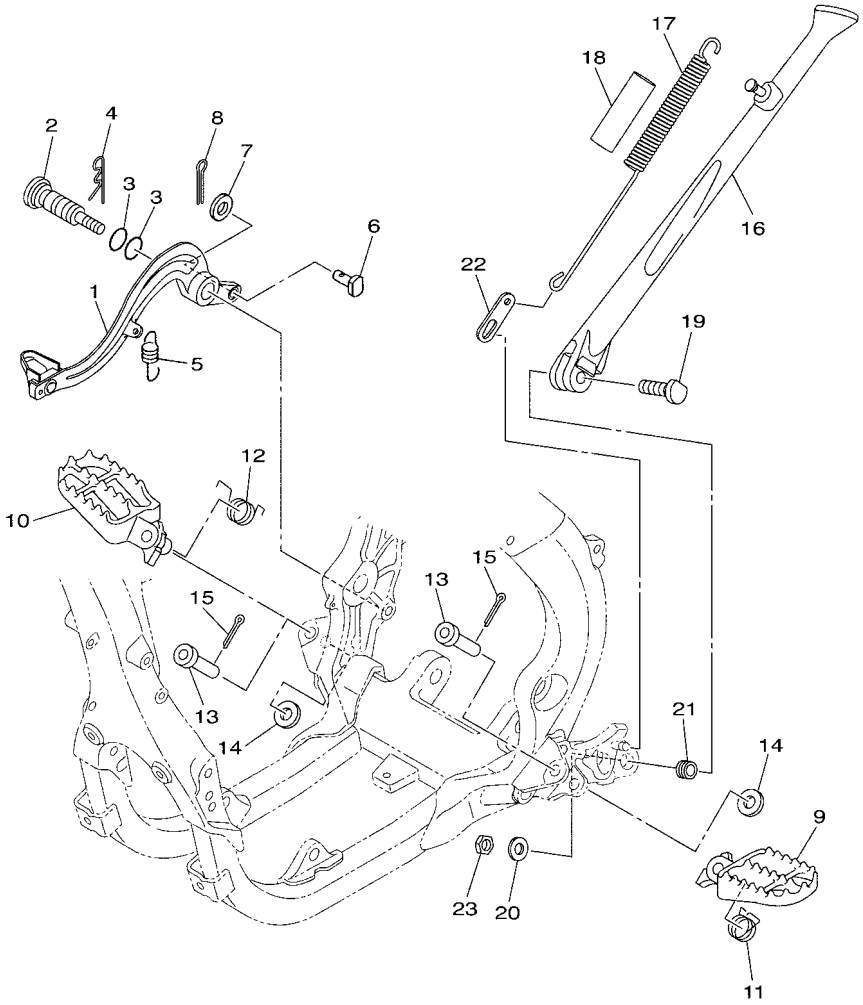

2GC1110-R360

FIG. 36 STAND & FOOTREST

REF. NO.	PART NO.	DESCRIPTION	2GC7	2GC8	2GC9			REMARKS
1	33D–27200–01	PEDAL, BRAKE	1	1	1			
2	17D–27217–00	BOLT	1	1	1			
3	93210–11073	O-RING	2	2	2			
4	90468–16001	CLIP	1	1	1			
5	90506–18019	SPRING, TENSION	1	1	1			
6	90240–08120	PIN, CLEVIS	1	1	1			
7	90201–08044	WASHER, PLATE	1	1	1			
8	91402–20012	PIN, COTTER	1	1	1			
9	5XC–27411–M2	FOOTREST 1	1	1	1			
10	5XC–27421–M2	FOOTREST 2	1	1	1			
11	90508–28015	SPRING, TORSION	1	1	1			
12	90508–28018	SPRING, TORSION	1	1	1			
13	90240–10004	PIN, CLEVIS	2	2	2			
14	90201–10032	WASHER, PLATE	2	2	2			
15	91402–25015	PIN, COTTER	2	2	2			
16	5UM–27311–E1	STAND, SIDE	1	1	1			
17	90506–30005	SPRING, TENSION	1	1	1			
18	90445–217G3	HOSE (L70)	1	1	1			
19	90109–10026	BOLT	1	1	1			
20	90201–10045	WASHER, PLATE	1	1	1			
21	90387–1003G	COLLAR	1	1	1			
22	5UM–27315–E0	LINK, SIDE STAND	1	1	1			
23	90185–10018	NUT, SELF-LOCKING	1	1	1			

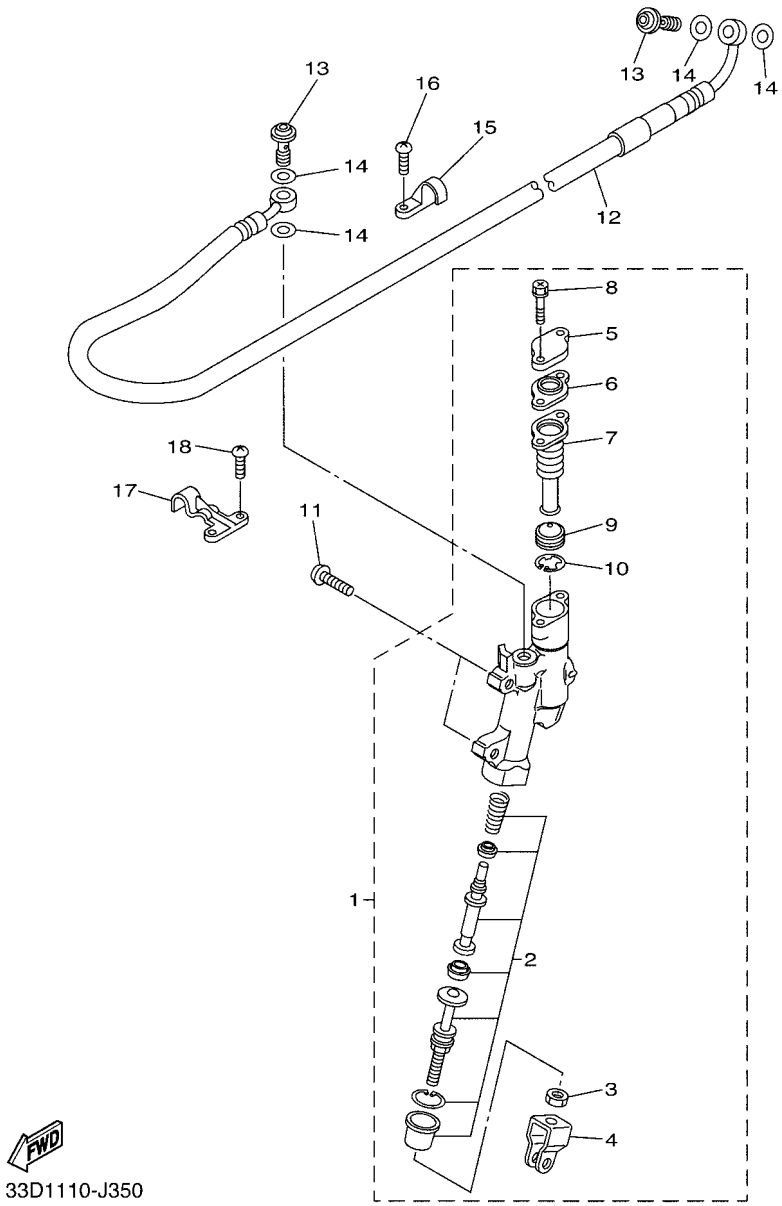

FIG. 37 REAR MASTER CYLINDER

REF. NO.	PART NO.	DESCRIPTION	2GC7	2GC8	2GC9			REMARKS
1	33D–2583V–00	RR. MASTER CYLINDER ASSY.	1	1	1			
2	5UN–W0042–50	.CYLINDER KIT, MASTER	1	1	1			
3	5UN–27218–00	.NUT	1	1	1			
4	5UN–27222–00	.JOINT	1	1	1			
5	5UN–25852–50	.CAP, RESERVOIR	1	1	1			
6	5UN–2585B–00	.PLATE, DIAPHRAGM	1	1	1			
7	5UN–25854–00	.DIAPHRAGM, RESERVOIR	1	1	1			
8	5UN–27217–00	.BOLT	2	2	2			
9	5CG–25715–00	.SEPARATOR ASSY	1	1	1			
10	5CG–2585G–00	.CIRCLIP	1	1	1			
11	90111–06116	BOLT,HEX. SOCKET BUTTON	2	2	2			
12	5XC–25873–L0	HOSE, BRAKE 2	1	1	1			
13	90401–10172	BOLT, UNION	2	2	2			
14	90430–10005	GASKET	4	4	4			
15	1C3–25886–50	HOLDER, BRAKE HOSE	1	1	1			
16	98502–05010	SCREW, PAN HEAD	2	2	2			
17	1C3–25876–50	HOLDER, BRAKE HOSE 2	1	1	1			
18	98502–05010	SCREW, PAN HEAD	2	2	2			

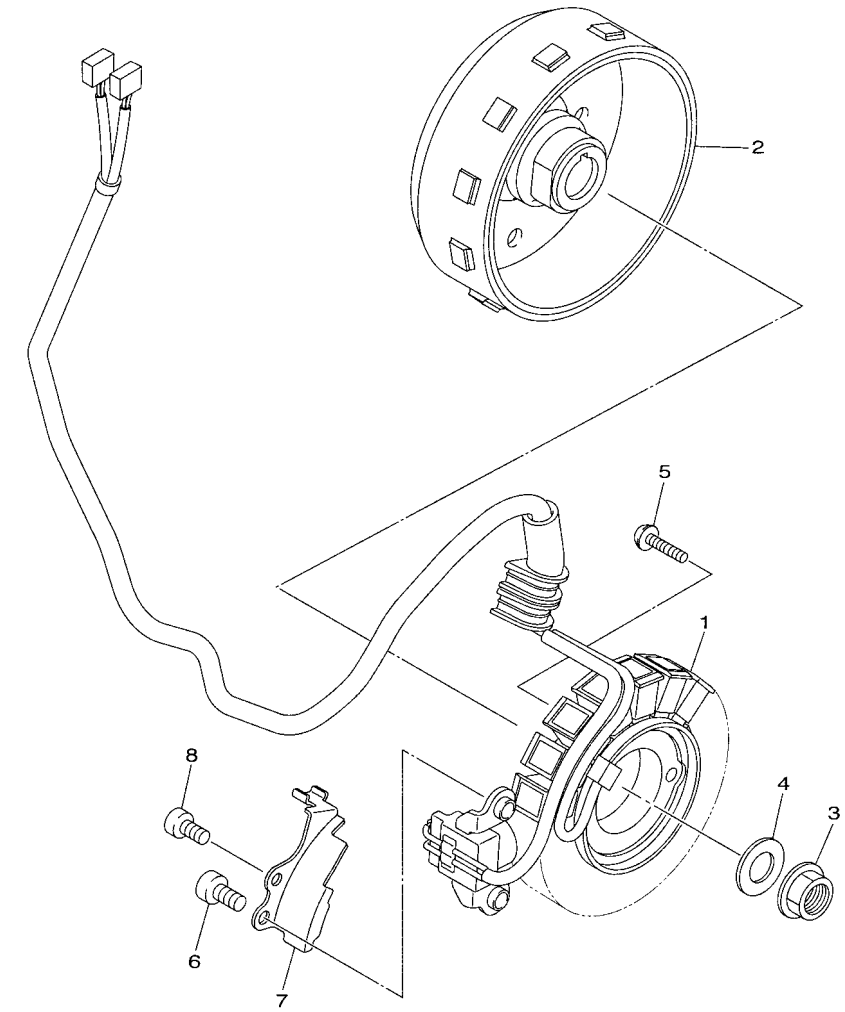

2GC1110-R380

FIG. 38 GENERATOR

REF. NO.	PART NO.	DESCRIPTION	2GC7	2GC8	2GC9			REMARKS
1	2GB–81410–01	STATOR ASSY	1	1	1			
2	2GC–81450–00	ROTOR ASSY	1	1	1			
3	90179–12657	NUT	1	1	1			
4	90201–127E1	WASHER, PLATE	1	1	1			
5	90149–05040	SCREW	2	2	2			
6	90110–06401	BOLT, HEXAGON SOCKET HEAD	2	2	2			
7	2GC–81528–00	CLAMP 1	1	1	1			
8	90110–05032	BOLT, HEXAGON SOCKET HEAD	1	1	1			

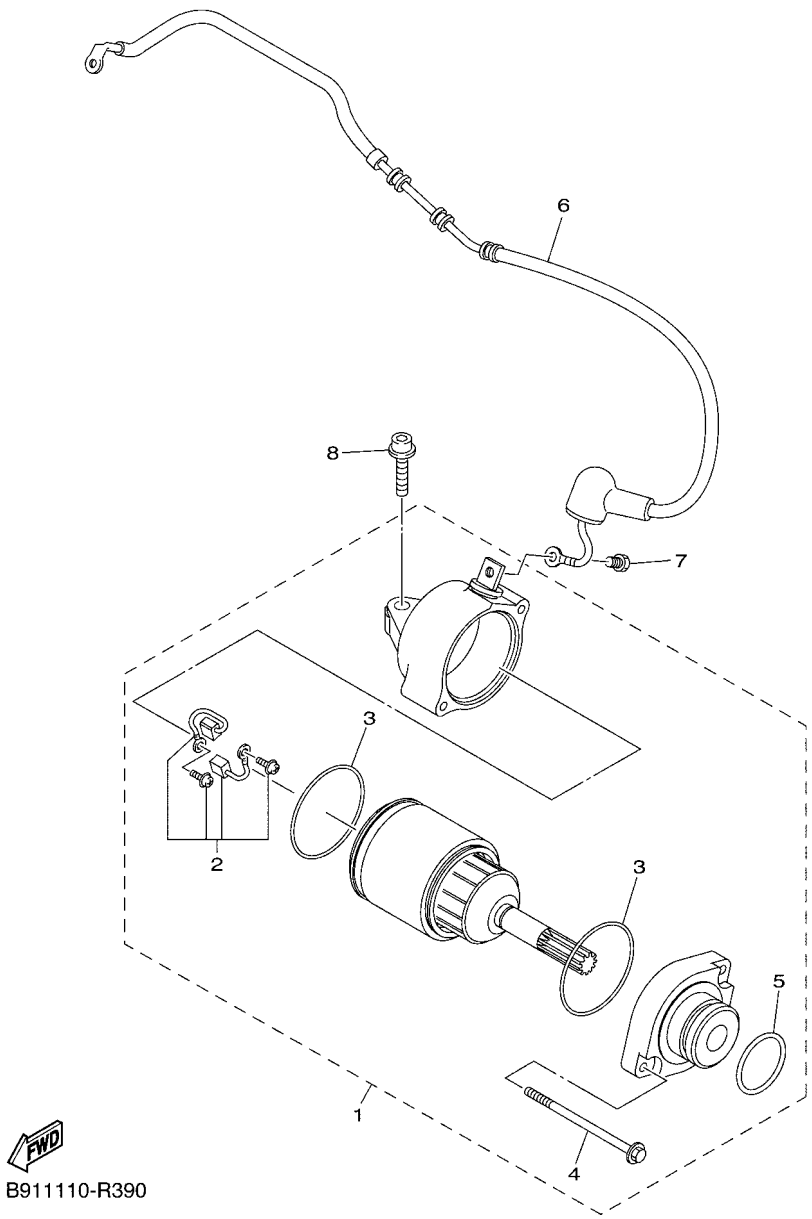

FIG. 39 STARTING MOTOR

REF. NO.	PART NO.	DESCRIPTION	2GC7	2GC8	2GC9			REMARKS
1	2GC–81890–00	MOTOR ASSY	1	1	1			
2	2GC–81801–00	.BRUSH SET	1	1	1			
3	2GC–8182M–00	.O-RING	2	2	2			
4	50W–81846–M1	.SCREW	2	2	2			
5	93210–25711	.O-RING	1	1	1			
6	2GC–8183G–00	CORD COMP.	1	1	1			
7	5TJ–81828–01	BOLT 2	1	1	1			
8	90110–06388	BOLT, HEXAGON SOCKET HEAD	1	1	1			

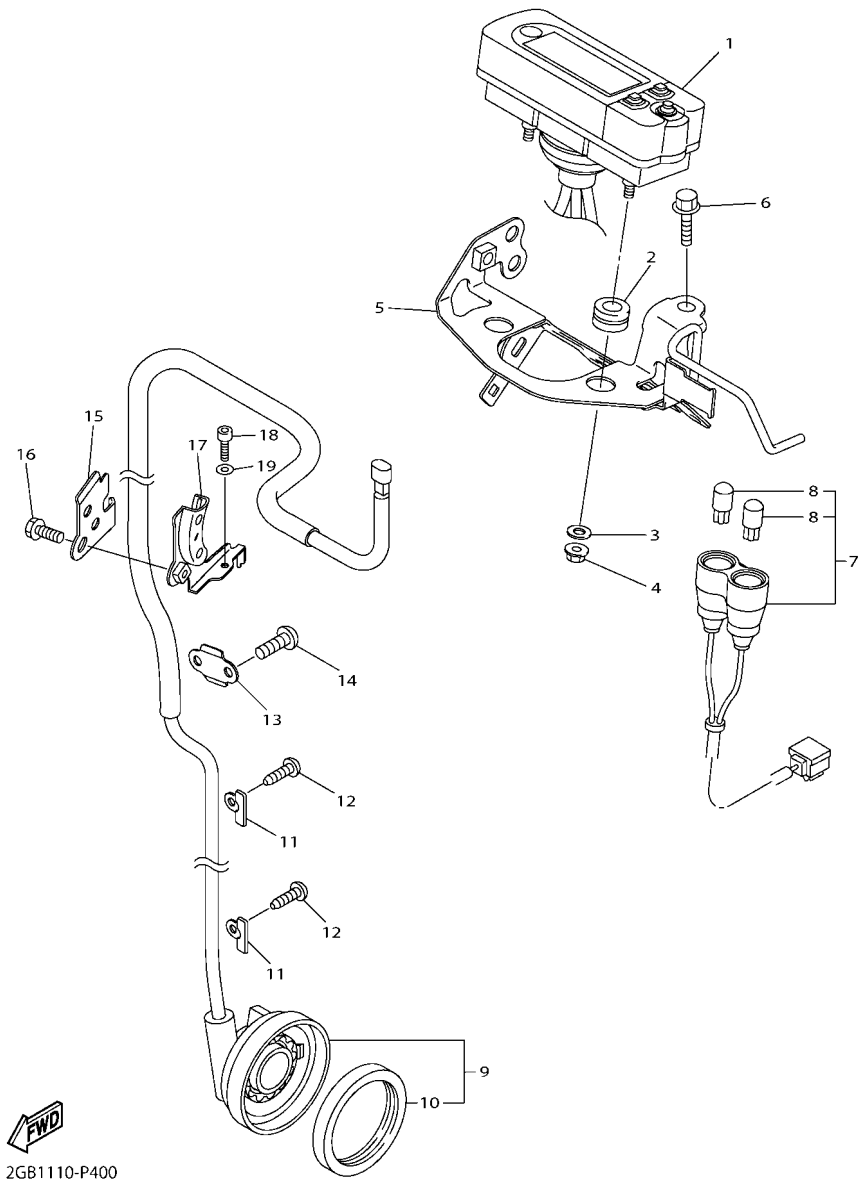

FIG. 40 METER

REF. NO.	PART NO.	DESCRIPTION	2GC7	2GC8	2GC9			REMARKS
1	2GB–83500–30	METER ASSY (KM/H)	1					
	2GB–83500–00	METER ASSY (KM/H)		1	1			
	2GB–83500–10	METER ASSY (MPH)		1				FOR GBR
2	90480–14012	GROMMET	2	2	2			
3	90201–05021	WASHER, PLATE	2	2	2			
4	95702–05500	NUT, FLANGE	2	2	2			
5	2GB–83519–00	BRACKET, METER	1	1	1			
6	90105–06170	BOLT, FLANGE	1	1	1			
7	2GB–83530–00	PILOT LIGHT ASSY	1	1	1			
8	5GH–83516–00	.BULB (12V-1.7W T6.5)	2	2	2			
9	2GB–83755–00	SENSOR, SPEED	1	1	1			
10	93105–47007	.OIL SEAL	1	1	1			
11	5TJ–8375F–C0	PLATE 2	2	2	2			
12	97702–40010	SCREW, TAPPING	2	2	2			
13	5TJ–8375E–C0	PLATE 1	1	1	1			
14	92012–05008	BOLT, BUTTON HEAD	2	2	2			
15	2GB–83595–00	CLAMP	1	1	1			
16	90105–06105	BOLT, FLANGE	1	1	1			
17	2GB–23591–00	BRACKET 1	1	1	1			
18	92012–06012	BOLT, BUTTON HEAD	1	1	1			
19	92902–06600	WASHER, PLATE	1	1	1			

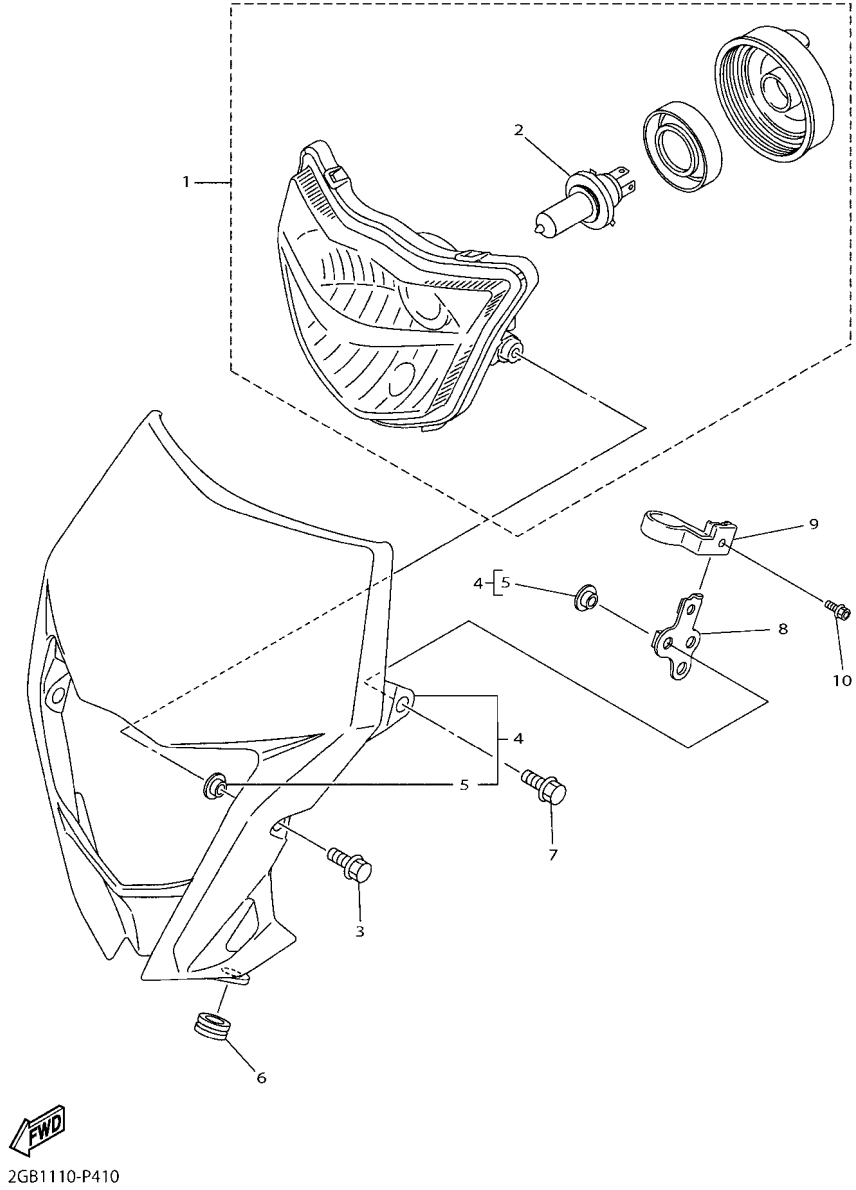

FIG. 41 HEADLIGHT

REF. NO.	PART NO.	DESCRIPTION	2GC7	2GC8	2GC9			REMARKS
1	2GB–84300–00	HEADLIGHT ASSY	1	1	1			
2	1DX–84314–00	.BULB (12V-35/35W HS1)	1	1	1			
3	90105–06064	BOLT, FLANGE	2	2	2			
4	1DX–84330–00	BODY ASSY	1	1	1			
5	90387–06170	.COLLAR	4	4	4			
6	90480–12020	GROMMET	2	2	2			
7	90105–06064	BOLT, FLANGE	2	2	2			
8	2GB–2831V–00	STAY, HEAD LIGHT 1	1	1	1			
9	5TJ–2331E–80	GUIDE, CABLE	1	1	1			
10	90105–05016	BOLT, FLANGE	1	1	1			

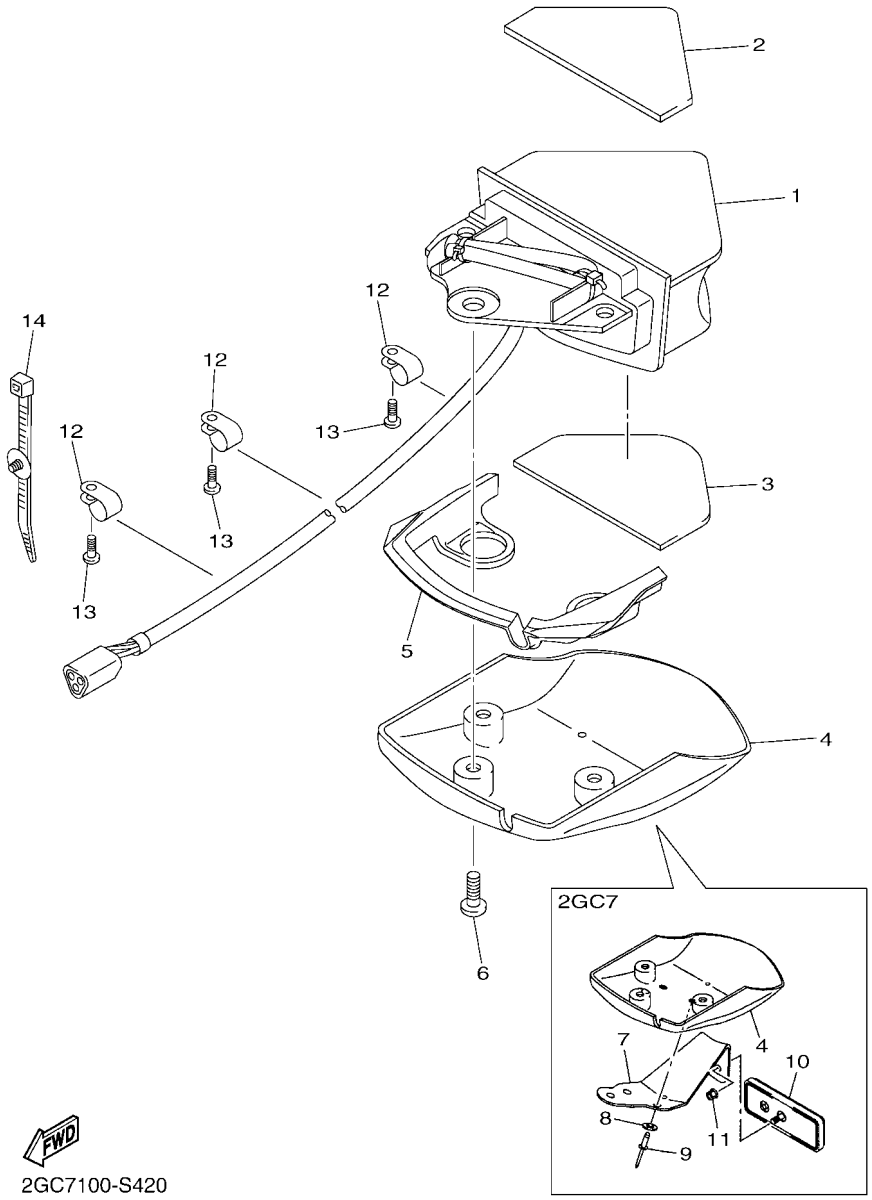

2GC7100-S420

FIG. 42 TAILLIGHT

REF. NO.	PART NO.	DESCRIPTION	2GC7	2GC8	2GC9			REMARKS
1	1DX–84710–00	TAILLIGHT UNIT ASSY	1	1	1			
2	5UM–84736–E0	DAMPER, TAIL 1	1	1	1			
3	5UM–84737–E0	DAMPER, TAIL 2	1	1	1			
4	5TJ–84716–U0	COVER, TAILLIGHT	1					
	5UM–84716–E0	COVER, TAILLIGHT		1	1			
5	2GC–84718–00	GROMMET	1	1	1			
6	90160–05012	SCREW, ROUND TAPPING	3					
	97702–50016	SCREW, TAPPING		3	3			
7	5TJ–84781–U0	BRACKET 1	1					
8	90201–047R8	WASHER, PLATE	3					
9	90267–48084	RIVET, BLIND	3					
10	3Y6–85130–02	REAR REFLECTOR ASSY	1					
11	95602–05200	NUT, SELF-LOCKING	1					
12	90464–11M18	CLAMP	3	3	3			
13	97702–40010	SCREW, TAPPING	3	3	3			
14	90464–31002	CLAMP	1	1	1			

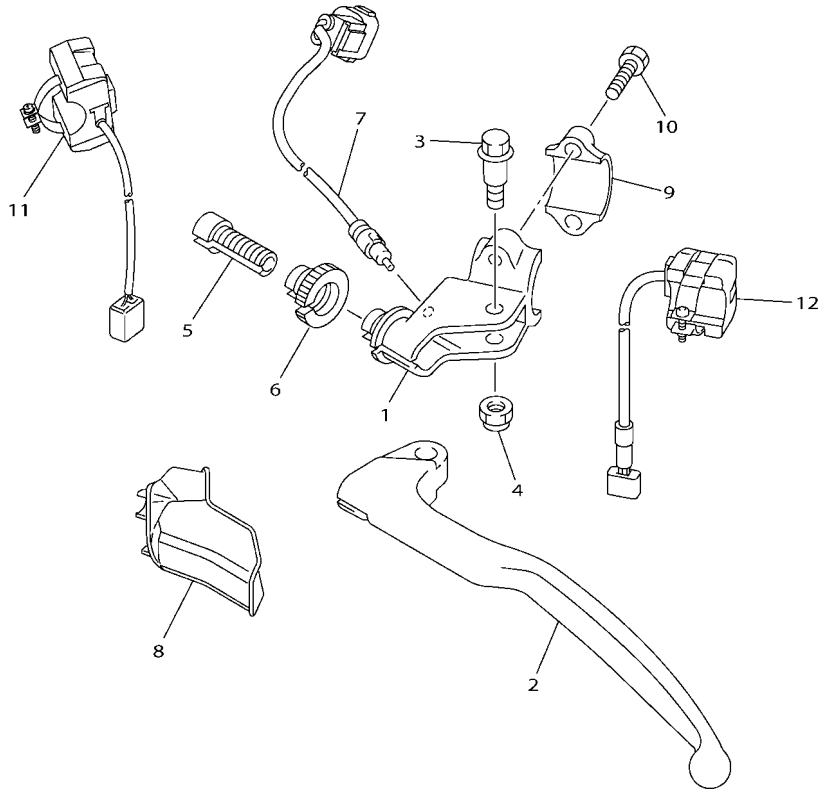

B291110-P400

FIG. 43 HANDLE SWITCH & LEVER

REF. NO.	PART NO.	DESCRIPTION	2GC7	2GC8	2GC9			REMARKS
1	5TJ–82911–80	HOLDER, LEVER 1	1	1	1			
2	5TJ–83912–82	LEVER 1	1	1	1			
3	90109–06034	BOLT	1	1	1			
4	5LP–84126–10	NUT, LENS FITTING	1	1	1			
5	5HD–26337–00	BOLT, ADJUSTING	1	1	1			
6	5HD–83951–00	BOLT, CABLE ADJUSTING	1	1	1			
7	2GB–82917–00	SWITCH	1	1	1			
8	5TJ–26372–80	COVER, HANDLE LEVER 1	1	1	1			
9	5TG–82913–00	HOLDER, LEVER LOWER 1	1	1	1			
10	97002–05016	BOLT	2	2	2			
11	2GB–83976–00	SWITCH, HANDLE 1	1	1	1			
12	1SL–83976–00	SWITCH, HANDLE 1	1	1	1			

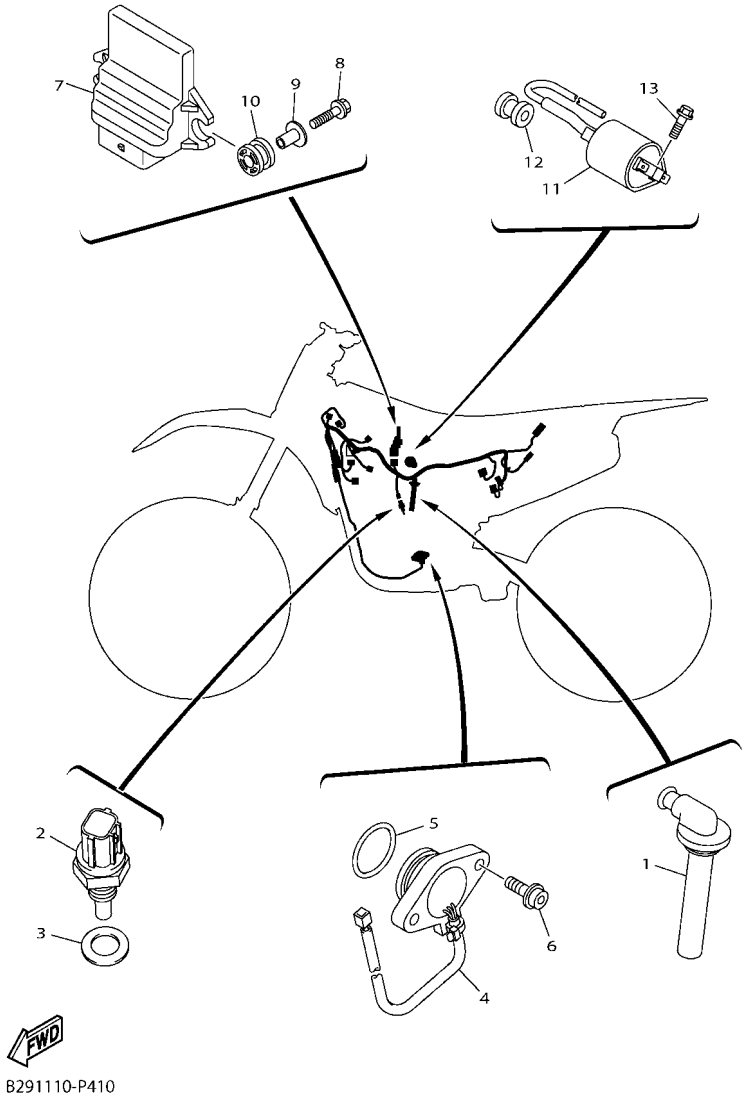

FIG. 44 ELECTRICAL 1

REF. NO.	PART NO.	DESCRIPTION	2GC7	2GC8	2GC9			REMARKS
1	33D–82370–00	PLUG CAP ASSY	1	1	1			
2	4P9–83591–00	THERMO UNIT	1	1	1			
3	90430–10004	GASKET	1	1	1			
4	2GB–82540–00	NEUTRAL SWITCH ASSY	1	1	1			
5	93210–21001	O-RING	1	1	1			
6	90110–05062	BOLT, HEXAGON SOCKET HEAD	2	2	2			
7	2GC–8591A–00	ENGINE CONTROL UNIT ASSY	1					
	2GC–8591A–10	ENGINE CONTROL UNIT ASSY		1	1			
8	90105–05005	BOLT, FLANGE	2	2	2			
9	90387–05048	COLLAR	2	2	2			
10	90480–13029	GROMMET	2	2	2			
11	1SL–82310–00	IGNITION COIL ASSY	1	1	1			
12	90480–11015	GROMMET	1	1	1			
13	95022–06016	BOLT, FLANGE	2	2	2			

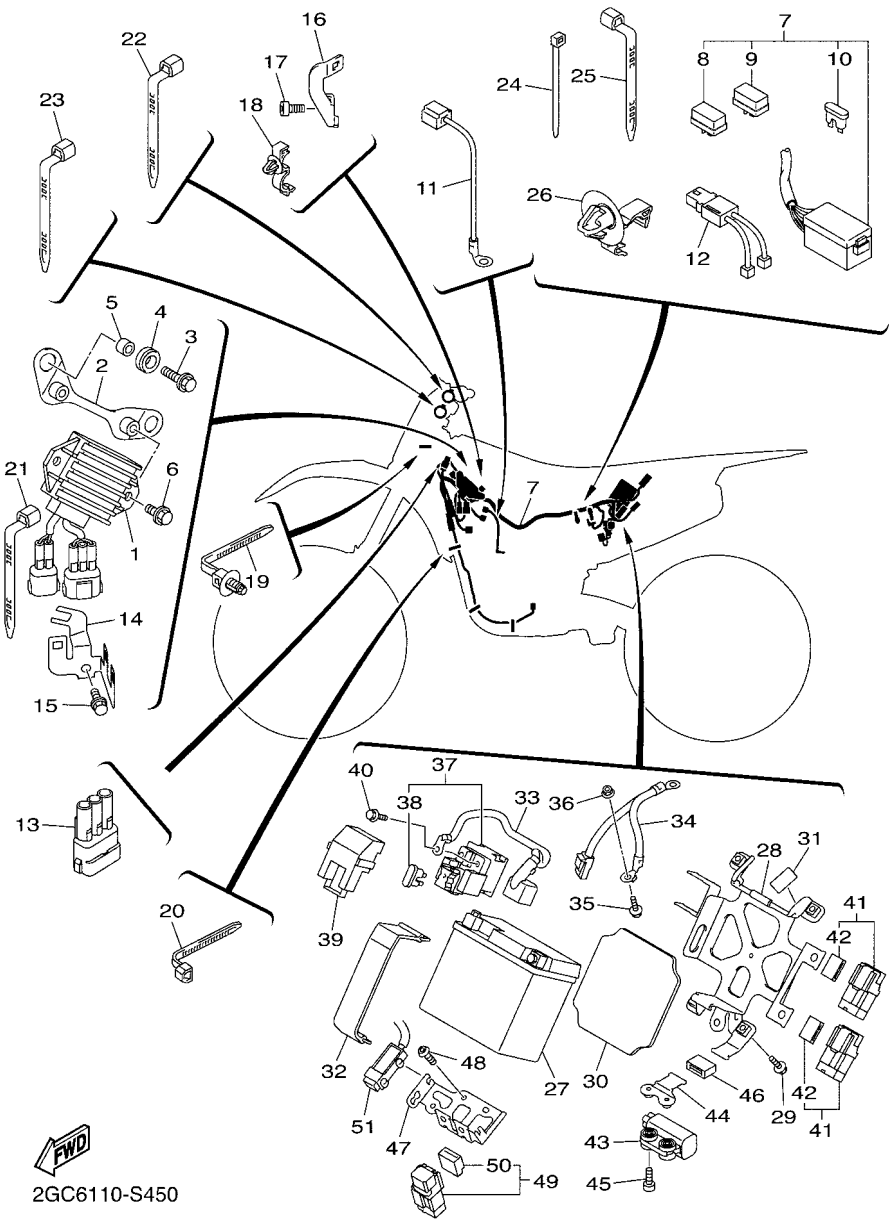

FIG. 45 ELECTRICAL 2

REF. NO.	PART NO.	DESCRIPTION	2GC7	2GC8	2GC9			REMARKS
1	2GB–81960–00	RECTIFIER & REGULATOR ASSY	1	1	1			
2	1SL–21287–00	BRACKET, REGULATOR	1	1	1			
3	90105–06203	BOLT, FLANGE	2	2	2			
4	90480–13025	GROMMET	2	2	2			
5	90387–066J9	COLLAR	2	2	2			
6	90105–06064	BOLT, FLANGE	2	2	2			
7	2GC–82590–00	WIRE HARNESS ASSY	1	1	1			
8	3WP–81980–00	.DIODE ASSY	2	2	2			
9	4WA–81980–00	.DIODE ASSY	1	1	1			
10	5JJ–82151–90	.FUSE (5A-BL)	1	1	1			
11	2GC–82583–00	WIRE, SUB LEAD	1	1	1			
12	1SL–82309–00	WIRE, SUB LEAD	1	1	1			
13	33D–82378–00	CONNECTOR	1	1	1			
14	2GC–82388–10	PLATE	1	1	1			
15	90105–06110	BOLT, FLANGE	1	1	1			
16	1SL–82389–00	PLATE 2	1	1	1			
17	91380–06012	BOLT	1	1	1			
18	90464–17003	CLAMP	1	1	1			
19	90464–30009	CLAMP	1	1	1			
20	90465–10098	CLAMP	1	1	1			
21	90464–13073	CLAMP	1	1	1			
22	90464–13077	CLAMP	2	2	2			
23	90464–13073	CLAMP	2	2	2			
24	1UA–82591–00	BAND	1	1	1			
25	90464–32060	CLAMP	1	1	1			
26	90464–08010	CLAMP	1	1	1			
27	5TJ–82100–01	BATTERY ASSY (YTZ7S(F))	1	1	1			

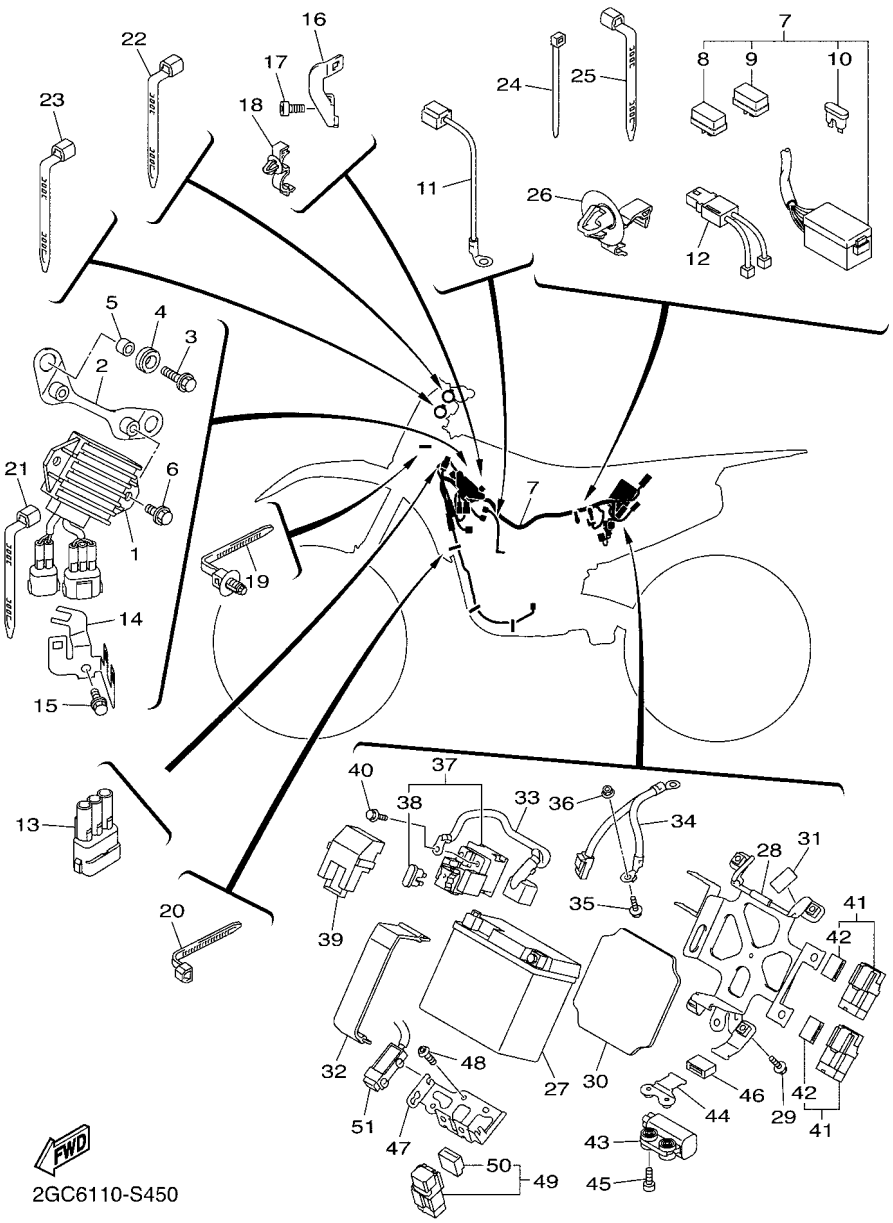

FIG. 45 ELECTRICAL 2

REF. NO.	PART NO.	DESCRIPTION	2GC7	2GC8	2GC9			REMARKS
28	2GB–82128–00	BRACKET, BATTERY	1	1	1			
29	90119–06133	BOLT, WITH WASHER	4	4	4			
30	2GB–82176–00	DAMPER	1	1	1			
31	2GC–21652–00	PROTECTOR	1	1	1			
32	8CY–82131–00	BAND, BATTERY	1	1	1			
33	2GC–82115–00	WIRE, PLUS LEAD	1	1	1			
34	2GC–82116–00	WIRE, MINUS LEAD	1	1	1			
35	90105–06064	BOLT, FLANGE	1	1	1			
36	95702–06500	NUT, FLANGE	1	1	1			
37	2GB–81940–00	STARTER RELAY ASSY (RC19-102B)	1	1	1			
38	36Y–82151–00	.FUSE (15A-BLUE)	2	2	2			
39	5SL–82119–10	COVER, LEAD WIRE	1	1	1			
40	95022–06008	BOLT, FLANGE	2	2	2			
41	1ST–81950–00	RELAY ASSY (1ST-00)	2	2	2			
42	5JJ–81952–00	.HOLDER, RELAY	1	1	1			
43	5VU–82576–01	SENSOR, LEAN ANGLE	1	1	1			
44	2GC–85542–00	BRACKET	1	1	1			
45	90110–04005	BOLT, HEXAGON SOCKET HEAD	2	2	2			
46	2GB–83513–00	DAMPER	1	1	1			
47	2GB–8252H–00	PLATE, HOLDER	1	1	1			
48	97702–50014	SCREW, TAPPING	2	2	2			
49	1TP–81950–00	RELAY ASSY (1TP-00)	2	2	2			
50	5EA–81952–00	.HOLDER, RELAY	1	1	1			
51	2GB–82718–00	RESISTOR ASSY	1	1	1			

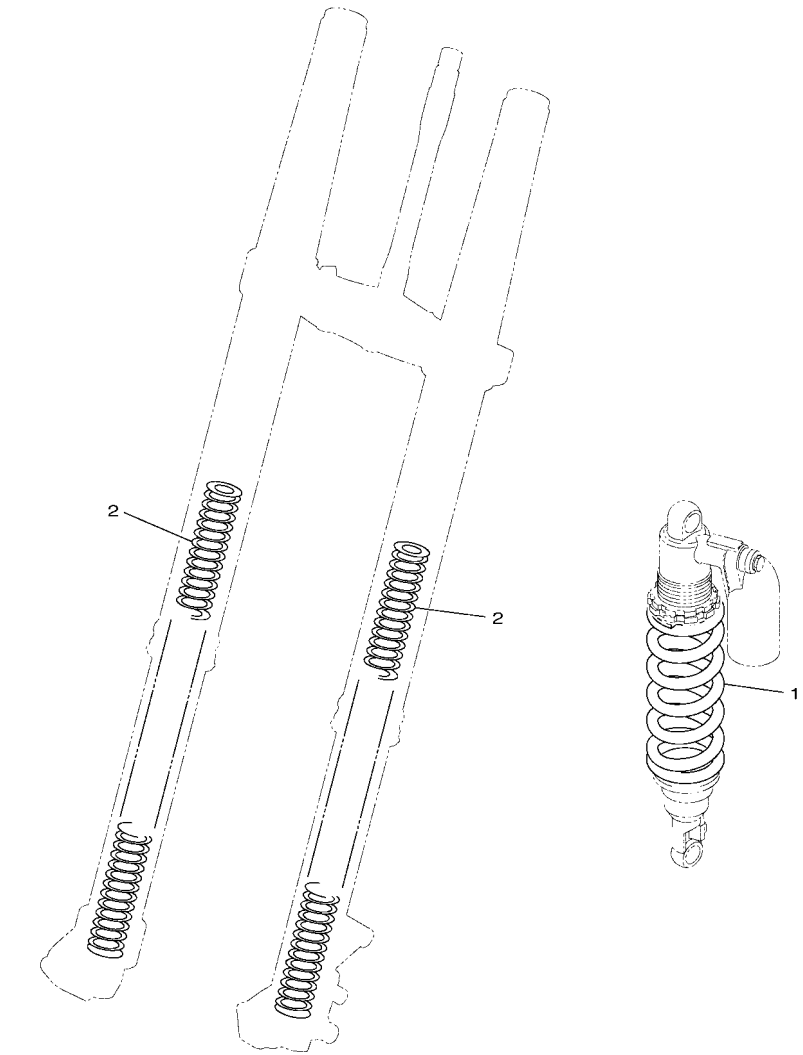

1SL1110-N390

FIG. 46 ALTERNATE FOR CHASSIS

REF. NO.	PART NO.	DESCRIPTION	2GC7	2GC8	2GC9			REMARKS
1	1SL–22212–00	SPRING (K=58 BLUE)	1	1	1			AP UR
	1SL–22212–40	SPRING (K=52 BLUE)	1	1	1			AP UR
	1SL–22212–60	SPRING (K=54 BLUE)	1	1	1			AP UR
	1SL–22212–80	SPRING (K=60 BLUE)	1	1	1			AP UR
	2GB–22212–00	SPRING (K=50 BLUE)	1	1	1			AP UR
	2GB–22212–10	SPRING (K=48 BLUE)	1	1	1			AP UR
2	2GB–23141–A0	SPRING, FRONT FORK (K=4.1N/MM)	1	1	1			AP
	2GB–23141–B0	SPRING, FRONT FORK (K=4.2N/MM)	1	1	1			AP
	2GB–23141–C0	SPRING, FRONT FORK (K=4.3N/MM)	1	1	1			AP
	2GB–23141–D0	SPRING, FRONT FORK (K=4.4N/MM)	1	1	1			AP
	2GB–23141–E0	SPRING, FRONT FORK (K=4.5N/MM)	1	1	1			AP
	33D–23141–30	SPRING, FRONT FORK(K=4.6N/MM)	1	1	1			AP

PART NO.	REF. NO.
1SL–11102–00	1 – 1
5PS–11133–10	1 – 2
5PS–11134–10	1 – 3
2GC–11166–00	11 – 1
2GC–1117J–10	1 – 20
33D–11181–00	1 – 14
33D–11190–39	1 – 19
33D–11193–01	1 – 22
33D–1119E–00	1 – 24
5UM–1119E–00	1 – 23
1SL–11311–00	1 – 25
1SL–11351–00	1 – 26
2GC–11400–00	2 – 1
2GC–11412–00	2 – 2
2GC–11422–00	2 – 3
2GC–11454–00	2 – 14
33D–11455–00	2 – 9
2S2–11464–00	2 – 16
2S2–11531–00	2 – 11
1SL–11536–00	2 – 8
33D–11603–00	2 – 22
1SL–11631–00	2 – 21
33D–11633–00	2 – 23
33D–11651–03	2 – 6
5TG–11681–01	2 – 4
1SL–116A0–00	2 – 20
1SL–11917–00	5 – 6
1SL–12111–00	3 – 1
33D–12113–00	3 – 5
B11–12114–00	3 – 6
33D–12116–00	3 – 3
33D–12117–00	3 – 7
3LD–12117–00	3 – 8
3LD–12118–00	3 – 9
51Y–12119–00	3 – 10
1SL–12121–00	3 – 2
33D–12126–00	3 – 4
4C8–12153–09	3 – 12
5EB–12153–09	3 – 13
4C8–12153–10	3 – 12
5EB–12153–10	3 – 13
3LD–12168–00	3 – 11
3LD–12168–20	3 – 11
3LD–12168–40	3 – 11
3LD–12168–60	3 – 11
3LD–12168–80	3 – 11
3LD–12168–A0	3 – 11
3LD–12168–F0	3 – 11

PART NO.	REF. NO.
3LD–12168–H1	3 – 11
3LD–12168–K1	3 – 11
3LD–12168–M1	3 – 11
3LD–12168–R1	3 – 11
3LD–12168–U1	3 – 11
3LD–12168–W1	3 – 11
3LD–12168–Y1	3 – 11
3LD–12169–11	3 – 11
3LD–12169–31	3 – 11
3LD–12169–50	3 – 11
3LD–12169–70	3 – 11
3LD–12169–90	3 – 11
3LD–12169–E0	3 – 11
3LD–12169–G0	3 – 11
3LD–12169–J0	3 – 11
3LD–12169–L0	3 – 11
3LD–12169–N0	3 – 11
3LD–12169–T0	3 – 11
2GC–12170–00	4 – 1
2GC–12180–00	4 – 2
5TA–12210–30	4 – 5
4FM–12213–00	4 – 8
5EL–12214–00	4 – 7
5EL–12228–00	4 – 6
1SL–12233–00	4 – 13
5BE–12241–00	1 – 21
33D–12251–00	4 – 11
33D–12252–00	4 – 12
2GB–12405–00	6 – 9
2GC–1240A–00	6 – 7
33D–12422–00	5 – 8
33D–12427–00	5 – 9
1SL–12446–00	6 – 4
1SL–12450–01	5 – 1
2GC–12461–00	6 – 8
5SL–12462–00	6 – 12
33D–12465–00	6 – 13
2GC–12482–00	6 – 1
5BE–12564–00	5 – 14
2GC–12576–00	6 – 17
1SL–12577–00	6 – 18
2GC–12578–00	6 – 19
1SL–12579–00	6 – 20
2GB–12615–00	6 – 11
5SL–12671–00	6 – 10
1SL–13300–00	7 – 1
1SL–13371–00	13 – 1
1SL–13411–10	7 – 4

PART NO.	REF. NO.
5D3–13440–02	8 – 1
1SL–13447–00	8 – 2
1SL–13447–00	13 – 2
33D–13577–00	10 – 7
33D–13597–10	9 – 1
2GC–13750–00	10 – 1
3B4–13761–00	10 – 11
33D–13907–01	28 – 15
33D–13938–00	10 – 2
1SL–13971–01	28 – 19
3TJ–14137–40	10 – 10
5PS–14147–00	10 – 12
1SL–14171–00	10 – 4
1DX–14216–00	10 – 9
1SL–14293–00	9 – 4
33D–14325–00	10 – 5
33D–14348–00	10 – 6
1SL–14411–00	9 – 7
1SL–14412–01	9 – 27
5TJ–14419–00	9 – 26
1SL–14422–00	9 – 17
2GB–14425–00	9 – 40
2GB–14426–00	9 – 41
1SL–14428–00	9 – 13
2GB–1442G–00	9 – 42
1SL–14437–01	9 – 31
1SL–1443A–01	9 – 32
1SL–14442–00	9 – 24
1SL–14451–00	9 – 11
1SL–14452–00	9 – 28
2GC–14453–00	9 – 8
1SL–14457–00	9 – 29
1SL–14458–00	9 – 12
2GB–14459–00	9 – 9
1SL–14462–00	9 – 18
33D–14486–00	10 – 3
1DX–14562–00	10 – 8
1SL–14611–00	12 – 1
33D–14613–00	12 – 5
1SL–14621–00	12 – 7
5TJ–14623–00	12 – 22
1SL–14628–00	12 – 2
1SL–14639–00	12 – 14
1SL–1463B–00	12 – 9
2GC–14701–00	12 – 19
1SL–14714–00	12 – 26
5XD–14714–00	12 – 8
1SL–14715–00	12 – 27

PART NO.	REF. NO.
5VY–14747–00	12 – 15
5TJ–14780–00	12 – 20
5TJ–14784–00	12 – 21
1SL–14788–00	12 – 12
5TJ–14799–00	12 – 24
1SL–15100–09	13 – 5
5XC–15118–00	13 – 28
1SL–15155–00	13 – 7
2GC–15199–00	14 – 15
3Y1–15361–00	13 – 27
3Y1–15363–10	14 – 6
4JT–15381–01	13 – 22
18P–15383–00	13 – 20
1SL–15388–00	13 – 24
2GC–15411–00	14 – 1
33D–15415–10	14 – 30
1SL–15421–00	13 – 17
1SL–15431–00	14 – 23
2GC–15436–00	14 – 19
2GC–15441–00	13 – 15
1SL–15451–00	14 – 8
33D–15453–00	14 – 31
1SL–15462–00	14 – 27
5TJ–1549B–30	14 – 12
2GB–15515–00	16 – 6
2GC–15517–00	16 – 5
4GY–15521–00	16 – 4
5TJ–15560–20	16 – 1
5TJ–15590–00	16 – 7
2S2–15601–00	15 – 1
1SL–15620–00	15 – 17
1SL–15621–00	15 – 18
5TA–15651–00	15 – 14
5GR–15664–00	15 – 8
2NX–15668–00	15 – 11
2S2–15671–00	15 – 4
3Y6–15674–00	15 – 10
2S2–16111–60	17 – 1
B11–16150–00	17 – 4
5XD–16154–00	17 – 11
5TA–16321–00	17 – 8
5VY–16321–00	17 – 12
1TA–16325–00	17 – 13
4X7–16325–00	17 – 7
5JG–16351–00	17 – 6
33D–16356–00	17 – 17
1SL–16357–10	17 – 21
5TA–16371–20	17 – 5

PART NO.	REF. NO.
2GC–16381–10	17 – 22
2GC–16383–00	17 – 14
5TJ–17121–20	18 – 9
2GC–17131–00	18 – 6
5TJ–17141–20	18 – 7
5TJ–17151–20	18 – 3
5TJ–17211–20	18 – 14
5TJ–17221–20	18 – 25
5TJ–17231–20	18 – 20
5TJ–17241–20	18 – 23
2GC–17251–00	18 – 17
1SL–17402–00	18 – 13
5TJ–17411–30	18 – 2
1SL–17466–00	13 – 18
1SL–17471–00	18 – 34
2GC–18101–00	20 – 10
1SM–18110–00	20 – 14
1SL–18122–00	20 – 3
2GB–18140–10	19 – 12
1SL–18172–00	20 – 8
3XJ–18173–10	20 – 2
33D–18175–00	19 – 15
3XJ–18178–00	20 – 4
3XJ–18182–00	20 – 5
3XJ–18184–00	20 – 7
2GB–18185–00	20 – 1
1SL–18511–00	19 – 6
1SL–18512–00	19 – 7
1SL–18513–00	19 – 8
1SL–18531–00	19 – 9
1SL–18535–00	19 – 10
1SL–18541–00	19 – 1
3D7–18542–00	19 – 2
1SL–18562–00	13 – 25
2GC–21101–01	21 – 1
2GB–21149–00	21 – 19
2GB–21163–00	21 – 41
1SL–21163–01	21 – 37
5PA–2118K–00	22 – 23
5PA–2118K–10	22 – 24
1SL–21190–10	21 – 5
1SL–21287–00	45 – 2
1SL–2134V–01	21 – 39
2GC–21417–00	21 – 24
2GC–21418–00	21 – 25
2GC–21425–00	21 – 31
2GC–21426–00	21 – 32
2GB–21447–00	21 – 2

PART NO.	REF. NO.
17D–21448–00	21 – 3
1DX–2147A–00	21 – 34
17D–21511–50	22 – 1
4XL–2153A–10	27 – 54
	27 – 56
2GB–21610–00	22 – 8
2GB–21610–U0	22 – 8
5XE–21635–10	22 – 9
3D7–21642–00	22 – 20
5TJ–2164F–U0	22 – 12
5TJ–2164G–U0	22 – 13
2GC–21652–00	45 – 31
2GC–2165A–00	22 – 25
3RV–21668–A0	24 – 32
3RV–21668–B0	24 – 33
1SL–21710–00	23 – 1
1SL–21719–00	23 – 12
1SL–2171E–00	21 – 44
2GB–2171X–00	21 – 47
2GB–21720–10	23 – 8
1SL–2172A–00	23 – 31
1SL–2172F–00	23 – 32
2GC–21730–00	23 – 16
2GC–21740–00	23 – 22
1DX–21746–00	23 – 13
1SL–21748–00	23 – 20
	23 – 26
17D–21749–00	23 – 17
	23 – 23
5BE–21749–00	22 – 10
	23 – 10
5TA–21749–00	23 – 3
	23 – 11
5TJ–21757–00	9 – 39
1SL–2175C–00	9 – 44
5FK–2175C–30	22 – 22
1SL–2176M–00	23 – 4
4XV–2177L–01	9 – 16
	9 – 19
2GC–217R0–60	23 – 16
2GC–217S0–60	23 – 22
1SL–22110–01	24 – 1
5XC–22121–91	24 – 28
34P–22122–00	24 – 29
2S2–22128–70	24 – 11
33D–22141–00	24 – 15
34P–22151–01	24 – 8
5UN–22176–00	25 – 14

PART NO.	REF. NO.
30X–22178–00	21 – 8
3JD–22178–20	21 – 13
17D–2217A–00	24 – 18
33D–2217F–00	24 – 24
4V4–22184–00	21 – 9
5MV–22184–00	25 – 15
2S2–22199–70	24 – 10
2GC–22200–10	25 – 1
2GC–22200–20	25 – 1
1SL–22212–00	46 – 1
2GB–22212–00	46 – 1
2GB–22212–10	46 – 1
1SL–22212–20	25 – 8
1SL–22212–40	46 – 1
1SL–22212–60	46 – 1
1SL–22212–80	46 – 1
1SL–22213–00	25 – 6
2GB–22214–00	25 – 9
33D–22224–00	25 – 10
4JX–22226–00	25 – 3
33D–22234–00	25 – 5
5NY–22241–00	25 – 21
5XE–22242–00	25 – 18
1C3–22253–50	25 – 11
1C3–22253–L1	25 – 16
4AA–22259–40	25 – 7
4AA–22259–70	25 – 7
4EW–22474–00	25 – 13
3JE–22475–00	25 – 12
5NY–22475–00	25 – 17
5UN–22898–60	33 – 12
1C3–22969–90	24 – 9
2GC–23102–00	27 – 1
2GC–23103–00	27 – 25
1DX–23110–00	27 – 28
5XC–23111–00	27 – 22
	27 – 46
276–23114–00	27 – 24
	27 – 48
1DX–23120–00	27 – 4
5XE–23125–L0	27 – 6
	27 – 30
33D–23136–00	27 – 2
	27 – 26
33D–23141–30	46 – 2
2GB–23141–40	27 – 21
	27 – 45
2GB–23141–A0	46 – 2
2GB–23141–B0	46 – 2
2GB–23141–C0	46 – 2
2GB–23141–D0	46 – 2
2GB–23141–E0	46 – 2
17D–23142–00	27 – 13
	27 – 37
5XE–23144–L0	27 – 10
	27 – 34
17D–23145–00	27 – 8
	27 – 32
5XC–23146–10	27 – 7
	27 – 31
1AE–23147–00	27 – 18
	27 – 42
1C3–23147–L0	27 – 12
	27 – 36
17D–23153–00	27 – 3
	27 – 27
5XE–23153–L0	27 – 9
	27 – 33
2HH–23158–L0	27 – 23
	27 – 47
1C3–2315H–10	27 – 55
5TJ–2315J–C0	27 – 53
2GC–2316A–00	27 – 14
	27 – 38
2GC–23170–00	27 – 11
	27 – 35
5XE–23171–L0	27 – 5
	27 – 29
2GB–2317E–U0	26 – 18
5DH–23183–00	25 – 4
509–23184–L0	25 – 2
1C3–23188–L0	27 – 15
	27 – 39
1C3–23188–N0	27 – 16
	27 – 40
1C3–23188–P0	27 – 17
	27 – 41
1C3–23188–R0	27 – 20
	27 – 44
1C3–23190–L0	27 – 19
	27 – 43
5TJ–2331E–80	41 – 9
33D–23340–10	27 – 49
3SP–23356–L0	27 – 57
17D–23389–50	26 – 2
17D–23416–50	26 – 6
1SL–23434–00	26 – 13
1SL–23435–00	26 – 9
1SL–23435–00	26 – 11
1SL–23442–00	26 – 12
5XC–23466–L0	27 – 58
5XC–23467–L0	27 – 59
33D–23472–00	21 – 6
2GB–23525–00	27 – 52
2GB–23591–00	40 – 17
2GB–24110–00	28 – 1
2GB–24110–10	28 – 1
1SL–24115–00	28 – 6
4EW–2412F–00	28 – 21
33D–24135–00	28 – 20
1S4–2414J–00	28 – 2
3FB–2415E–02	22 – 5
3FB–2415E–12	22 – 6
3PT–2416E–10	22 – 7
2GB–24181–00	21 – 48
33D–24182–00	21 – 49
33D–24183–00	21 – 50
1SL–24188–00	28 – 3
1SL–2419A–00	28 – 10
1DX–24474–00	28 – 26
33D–24486–00	28 – 16
33D–24491–00	28 – 17
1SL–24610–01	28 – 4
1SL–2464E–00	29 – 3
18P–2464V–00	21 – 55
5YT–24665–00	6 – 14
18P–2467E–00	21 – 54
1SL–2470F–00	29 – 2
1SL–24710–00	29 – 1
1SL–24734–00	29 – 5
1SL–24742–00	29 – 4
5NY–25104–00	30 – 7
5TJ–2510C–80	30 – 13
5NG–25111–50	30 – 1
5NY–25117–00	30 – 3
2GB–25181–00	30 – 12
5GS–25304–00	32 – 10
1DX–2530S–00	32 – 21
5ET–25311–00	32 – 1
5ET–25317–00	32 – 2
17D–2531B–00	30 – 6
	32 – 9
4XM–25364–00	32 – 15
1C3–25381–90	32 – 26
1C3–25388–H0	32 – 22
1C3–25389–H0	32 – 23
3JE–25394–00	32 – 14
5SF–25394–00	30 – 11
5GS–25448–50	32 – 16
5TJ–25450–80	32 – 16
5TJ–25452–80	32 – 16
5CG–25715–00	35 – 9
	37 – 9
17D–25718–50	33 – 20
5XC–25802–00	31 – 4
5KM–25803–10	31 – 5
B29–25805–00	31 – 9
2GC–2580T–00	31 – 3
1C3–2580W–72	33 – 3
B11–2581T–00	31 – 1
1UY–25824–51	31 – 7
	33 – 7
1UY–25825–51	31 – 8
	33 – 8
5UN–25827–60	33 – 11
5UN–25828–60	33 – 10
B11–2582W–00	33 – 1
5MV–25833–00	35 – 16
33D–2583V–00	37 – 1
5XC–25849–G0	31 – 16
5UN–25852–50	37 – 5
5XC–25852–G0	35 – 7
5XC–25853–G0	35 – 11
5UN–25854–00	37 – 7
5XC–25854–G0	35 – 6
5UN–2585B–00	37 – 6
5CG–2585G–00	35 – 10
	37 – 10
5MV–25867–00	35 – 15
2GC–25872–00	35 – 1
5XC–25873–L0	37 – 12
1C3–25876–50	37 – 17
1C3–25886–50	37 – 15
5MV–2589F–00	35 – 13
5UN–25913–00	33 – 19
5UN–25914–00	33 – 17
5DH–25914–50	33 – 15
3SP–25914–51	31 – 13
5DH–25916–00	31 – 11
	33 – 14
3JD–25917–00	31 – 14
	33 – 16
5DH–25919–00	31 – 6
5DH–25919–50	33 – 6
8CR–25924–00	33 – 13
3SP–25926–51	31 – 12
5DH–25933–00	31 – 10
1UY–25937–51	31 – 15
	33 – 18
17D–26111–H0	34 – 1
17D–26124–00	34 – 14
17D–26143–H0	34 – 15
1SL–26240–00	34 – 3
4GY–26241–00	34 – 2
4GY–26242–00	34 – 4
3Y1–26249–00	34 – 5
5BE–26281–01	34 – 6
5BE–26282–00	34 – 7
5SF–26287–11	34 – 9
1SL–26302–00	34 – 10
2GC–26335–00	34 – 11
5HD–26337–00	43 – 5
1C3–26342–50	34 – 13
5TJ–26372–80	43 – 8
5XC–26372–G0	35 – 17
33D–27200–01	36 – 1
17D–27217–00	36 – 2
5UN–27217–00	37 – 8
5UN–27218–00	37 – 3
5UN–27222–00	37 – 4
5UM–27311–E1	36 – 16
5UM–27315–E0	36 – 22
5XC–27411–M2	36 – 9
5XC–27421–M2	36 – 10
17D–27491–50	33 – 22
5SL–2814F–00	21 – 53
5ET–28166–10	21 – 51
5PG–2816R–00	22 – 23
2GC–28199–41	21 – 52
2GC–28199–71	21 – 52
2GB–2831V–00	41 – 8
1SL–28386–00	9 – 38
3FV–28386–00	9 – 37
2GB–81410–01	38 – 1
2GC–81450–00	38 – 2
2GC–81528–00	38 – 7
2GC–81801–00	39 – 2
5TJ–81828–01	39 – 7
2GC–8182M–00	39 – 3
2GC–8183G–00	39 – 6
50W–81846–M1	39 – 4
2GC–81890–00	39 – 1
2GB–81940–00	45 – 37
1ST–81950–00	45 – 41
1TP–81950–00	45 – 49
5EA–81952–00	45 – 50
5JJ–81952–00	45 – 42
2GB–81960–00	45 – 1
3WP–81980–00	45 – 8
4WA–81980–00	45 – 9
5TJ–82100–01	45 – 27
2GC–82115–00	45 – 33
2GC–82116–00	45 – 34
5SL–82119–10	45 – 39
2GB–82128–00	45 – 28
8CY–82131–00	45 – 32
36Y–82151–00	45 – 38
5JJ–82151–90	45 – 10
2GB–82176–00	45 – 30
1SL–82309–00	45 – 12
1SL–82310–00	44 – 11
33D–82370–00	44 – 1
33D–82378–00	45 – 13
2C0–82380–00	10 – 15
2GC–82388–10	45 – 14
1SL–82389–00	45 – 16
2GB–8252H–00	45 – 47
2GB–82540–00	44 – 4
5VU–82576–01	45 – 43
2GC–82583–00	45 – 11
2GC–82590–00	45 – 7
1UA–82591–00	45 – 24
2GB–82718–00	45 – 51
5TJ–82911–80	43 – 1
5TG–82913–00	43 – 9
2GB–82917–00	43 – 7
2GB–83500–00	40 – 1
2GB–83500–10	40 – 1
2GB–83500–30	40 – 1
2GB–83513–00	45 – 46
5GH–83516–00	40 – 8
2GB–83519–00	40 – 5
2GB–83530–00	40 – 7
4P9–83591–00	44 – 2
2GB–83595–00	40 – 15
2GB–83755–00	40 – 9
5TJ–8375E–C0	40 – 13
5TJ–8375F–C0	40 – 11

PART NO.	REF. NO.
5TJ–83912–82	43 – 2
5XC–83922–L0	35 – 12
5HD–83951–00	43 – 6
1SL–83976–00	43 – 12
2GB–83976–00	43 – 11
5LP–84126–10	43 – 4
2GB–84300–00	41 – 1
1DX–84314–00	41 – 2
1DX–84330–00	41 – 4
1DX–84710–00	42 – 1
5UM–84716–E0	42 – 4
5TJ–84716–U0	42 – 4
2GC–84718–00	42 – 5
5UM–84736–E0	42 – 2
5UM–84737–E0	42 – 3
5TJ–84781–U0	42 – 7
4AG–85111–00	26 – 19
3Y6–85130–02	22 – 16
	42 – 10
2GC–85542–00	45 – 44
2GB–85752–00	28 – 25
1DX–85753–00	28 – 27
1SL–85885–01	10 – 14
8FP–85886–00	9 – 14
2GC–8591A–00	44 – 7
2GC–8591A–10	44 – 7
5XC–W0041–00	35 – 5
5UN–W0042–50	37 – 2
1C3–W0046–B0	33 – 9
5UN–W0047–50	33 – 5
5UN–W0057–50	33 – 4
5XC–W2587–00	35 – 4
90101–06041	20 – 9
90101–06044	15 – 12
90101–08006	32 – 24
90105–05005	44 – 8
90105–05016	41 – 10
90105–06027	1 – 4
90105–06064	23 – 28
	41 – 3
	41 – 7
	45 – 6
	45 – 35
90105–06081	13 – 26
	18 – 35
90105–06099	13 – 16
90105–06100	22 – 18
90105–06104	24 – 12

PART NO.	REF. NO.
90105–06105	24 – 14
	40 – 16
90105–06108	33 – 2
90105–06110	33 – 21
	33 – 23
	45 – 15
90105–06111	33 – 24
90105–06127	22 – 3
90105–06148	4 – 9
90105–06170	26 – 3
	28 – 7
	28 – 11
	40 – 6
90105–06179	23 – 29
90105–06189	13 – 19
90105–06203	9 – 43
	13 – 3
	23 – 30
	45 – 3
90105–08133	21 – 16
90105–08134	26 – 17
	27 – 50
90105–08137	12 – 16
	31 – 17
90105–08143	21 – 26
	21 – 33
90105–08154	26 – 16
	27 – 51
90105–08230	12 – 29
	21 – 7
	23 – 6
	23 – 14
90105–10176	21 – 27
90105–10189	21 – 30
90105–10367	1 – 16
90105–10456	21 – 21
90109–06034	43 – 3
90109–08078	32 – 17
90109–10026	36 – 19
90110–04005	45 – 45
90110–05032	38 – 8
90110–05033	7 – 2
90110–05041	12 – 23
90110–05058	28 – 18
90110–05062	44 – 6
90110–05066	9 – 5
90110–06168	2 – 15
	13 – 8

PART NO.	REF. NO.
90110–06168	16 – 8
90110–06363	13 – 13
90110–06363	39 – 8
90110–06391	13 – 12
90110–06392	13 – 14
90110–06401	38 – 6
90110–08087	15 – 23
90111–06116	14 – 22
	37 – 11
90111–06149	28 – 23
90116–06037	1 – 12
90119–06096	23 – 7
	23 – 15
90119–06133	45 – 29
90119–06166	21 – 35
90119–06262	6 – 27
90119–06268	22 – 19
90119–06M12	20 – 15
90119–08170	12 – 30
90149–05040	38 – 5
90149–06074	13 – 23
90149–06108	28 – 29
90149–10031	21 – 4
90151–06024	4 – 14
90151–06045	15 – 21
90151–06051	31 – 2
90151–08003	13 – 21
90159–06010	17 – 10
90159–06021	7 – 6
90159–06027	19 – 14
90160–05012	42 – 6
90170–10405	2 – 18
90170–14171	2 – 12
90170–20255	17 – 3
	17 – 16
90179–08019	32 – 25
90179–10658	21 – 22
	21 – 28
90179–12657	38 – 3
90179–16011	30 – 14
90179–20001	18 – 33
90179–24004	26 – 10
90179–28015	26 – 7
90185–08008	32 – 18
90185–08009	21 – 17
90185–10012	25 – 22
90185–10018	36 – 23
90185–14010	24 – 31

PART NO.	REF. NO.
90185–16002	24 – 16
90185–20002	32 – 27
90201–04018	22 – 14
90201–047R8	42 – 8
90201–05017	12 – 3
	12 – 10
90201–05021	40 – 3
90201–06108	22 – 4
90201–08043	21 – 18
90201–08044	36 – 7
90201–08045	21 – 10
90201–08047	15 – 24
90201–08048	32 – 19
90201–08061	12 – 17
90201–10025	1 – 17
90201–10032	36 – 14
90201–10035	26 – 14
90201–10045	21 – 23
	21 – 29
	36 – 20
90201–105A8	16 – 2
90201–127E1	38 – 4
90201–14020	24 – 30
90201–15701	14 – 25
90201–16018	24 – 17
90201–167P7	15 – 6
90201–20020	32 – 28
90201–203E7	18 – 16
90201–20685	15 – 2
	15 – 15
90201–21014	24 – 23
90201–253K0	18 – 4
	18 – 21
90201–28020	26 – 8
90202–05193	28 – 28
90208–20008	17 – 2
	17 – 15
90209–16011	24 – 22
90209–21332	18 – 10
90209–22008	18 – 19
90209–26348	18 – 24
90215–10009	2 – 19
90215–14287	2 – 13
90215–21003	18 – 32
90240–08120	36 – 6
90240–10004	36 – 13
90267–32146	21 – 20
90267–40077	22 – 15

PART NO.	REF. NO.
90267–41004	9 – 36
90267–48084	42 – 9
90269–06008	9 – 20
90280–03006	2 – 25
90282–05034	2 – 17
90340–12007	1 – 5
90340–14011	14 – 4
90340–36002	14 – 2
90384–06003	13 – 30
90387–05048	44 – 9
90387–06065	6 – 26
90387–06091	28 – 8
90387–06105	26 – 4
90387–06142	14 – 21
90387–06170	41 – 5
90387–06259	22 – 2
90387–06284	28 – 24
90387–06372	23 – 19
	23 – 25
90387–065T2	21 – 45
90387–066J9	45 – 5
90387–066Y6	28 – 12
90387–07045	9 – 30
90387–08041	21 – 11
90387–08057	23 – 2
	23 – 9
90387–08081	12 – 18
90387–08086	22 – 11
90387–086N4	21 – 15
90387–087L0	9 – 22
90387–1003G	36 – 21
90387–11009	23 – 18
	23 – 24
90387–14016	24 – 27
90387–14020	20 – 11
90387–16026	24 – 21
90387–17015	13 – 11
90387–17016	24 – 6
90387–1714S	24 – 7
90387–20028	18 – 15
90387–21005	18 – 8
90387–2513F	18 – 29
90387–28012	18 – 26
90401–10172	35 – 3
	37 – 13
90430–06014	1 – 11
	4 – 10
	5 – 13

PART NO.	REF. NO.
90430–06014	14 – 17
90430–06156	7 – 3
90430–06166	13 – 4
90430–08119	1 – 9
90430–09002	10 – 13
90430–10004	44 – 3
90430–10005	35 – 2
	37 – 14
90430–10188	13 – 10
90445–09008	28 – 5
90445–217G3	36 – 18
90450–22001	6 – 23
90450–25001	6 – 22
90450–28001	6 – 21
90450–32003	6 – 24
90450–58007	9 – 6
90450–60004	9 – 3
90464–08010	45 – 26
90464–11M18	42 – 12
90464–13073	45 – 21
	45 – 23
90464–13077	45 – 22
90464–17003	45 – 18
90464–30009	45 – 19
90464–31002	21 – 43
	34 – 12
	42 – 14
90464–32060	45 – 25
90465–08062	14 – 18
90465–10098	45 – 20
90467–090A2	6 – 16
90467–140A4	11 – 2
90468–08104	11 – 3
90468–16001	36 – 4
90480–01027	9 – 25
90480–01558	9 – 35
90480–08608	32 – 20
90480–10068	23 – 21
	23 – 27
90480–10289	28 – 13
90480–11015	44 – 12
90480–11298	9 – 33
90480–12020	41 – 6
90480–12237	9 – 23
	9 – 34
90480–12581	14 – 20
90480–13025	45 – 4
90480–13029	44 – 10

PART NO.	REF. NO.
90480–14012	40 – 2
90480–15012	6 – 25
90480–18549	28 – 9
90501–052G5	20 – 6
90501–06022	19 – 3
90501–064L1	19 – 11
90501–147A5	15 – 19
90501–160A2	15 – 5
90501–230E4	17 – 9
90506–18019	36 – 5
90506–30005	36 – 17
90508–28015	36 – 11
90508–28018	36 – 12
90508–29023	20 – 12
90508–29041	19 – 13
90508–305B0	15 – 9
90520–04011	21 – 36
91312–05008	21 – 40
91312–06020	9 – 2
91380–06012	45 – 17
91402–20012	36 – 8
91402–25015	36 – 15
91808–16023	1 – 6
	1 – 7
91A20–05065	6 – 15
92012–05008	12 – 25
	40 – 14
92012–06010	21 – 38
	21 – 42
92012–06012	40 – 18
92902–06600	40 – 19
92902–10200	25 – 20
93101–14164	14 – 24
93102–08004	5 – 3
93102–08307	5 – 4
93102–10008	17 – 24
93102–20108	15 – 13
93102–26468	30 – 4
93102–32014	18 – 28
93105–47007	40 – 10
93106–22002	24 – 4
93106–30001	32 – 5
93106–30045	32 – 6
93109–14010	20 – 16
93109–21001	24 – 26
93109–25001	24 – 20
93109–28043	24 – 5
93210–11073	36 – 3

PART NO.	REF. NO.
93210–12010	7 – 5
93210–14369	14 – 5
93210–16500	6 – 3
93210–17570	15 – 22
93210–19123	14 – 7
93210–19758	5 – 15
93210–21001	44 – 5
93210–22164	18 – 30
93210–24253	6 – 5
93210–25711	39 – 5
93210–357A3	14 – 3
93210–45708	8 – 3
93210–58346	14 – 13
93300–60801	5 – 5
93300–60839	21 – 14
93304–20310	2 – 10
93306–00426	18 – 12
93306–00447	18 – 11
93306–07202	32 – 4
93306–20532	18 – 1
93306–205A5	18 – 27
93306–27212	32 – 3
93306–30633	2 – 7
93306–80502	19 – 5
93306–90409	19 – 4
	30 – 2
93310–212R6	16 – 3
93310–63458	2 – 5
93315–32166	24 – 19
	24 – 25
93317–11096	17 – 23
93317–22262	24 – 2
93332–00068	26 – 5
93332–00081	26 – 1
93340–21209	17 – 18
93342–22217	24 – 3
93410–20038	15 – 3
93440–07182	5 – 7
93440–10085	17 – 19
93440–25084	18 – 5
	18 – 18
93440–28062	18 – 22
93440–41178	4 – 3
93450–19052	2 – 24
93507–32009	15 – 20
93511–32027	17 – 20
93603–12030	5 – 2
93604–10011	5 – 10

PART NO.	REF. NO.
93608–33002	20 – 13
93612–16254	1 – 15
93612–16254	18 – 31
94108–21034	30 – 8
94112–18034	32 – 11
94212–18188	32 – 12
94227–21101	30 – 9
94309–18146	32 – 13
94309–21161	30 – 10
94416–21048	30 – 5
94421–18036	32 – 8
94591–57122	4 – 4
94682–42021	32 – 30
94701–00410	1 – 13
94701–00411	1 – 13
95022–06008	45 – 40
95022–06010	1 – 10
	5 – 12
	13 – 29
95022–06012	6 – 2
	14 – 16
95022–06014	14 – 14
95022–06016	8 – 4
	21 – 46
	44 – 13
95022–06020	6 – 6
	14 – 11
	28 – 14
95022–06025	5 – 11
	14 – 32
95022–06030	14 – 10
	14 – 29
95022–06035	1 – 18
	1 – 28
95022–06070	14 – 33
95022–08012	1 – 8
95022–08040	21 – 12
95022–10016	13 – 9
95024–08040	12 – 13
	12 – 28
95602–05200	22 – 17
	42 – 11
95602–06200	26 – 20
95602–10200	25 – 19
	26 – 15
95701–06500	35 – 14
95702–05500	40 – 4
95702–06500	24 – 13

PART NO.	REF. NO.
95702–06500	27 – 60
	45 – 36
95704–06500	12 – 6
97002–05016	43 – 10
97702–40010	40 – 12
	42 – 13
97702–40012	23 – 5
97702–50014	45 – 48
97702–50016	42 – 6
97702–50520	9 – 15
97702–60016	22 – 21
98502–05010	37 – 16
	37 – 18
98502–05014	9 – 10
	9 – 21
98507–05020	34 – 8
98706–04012	35 – 8
98707–06025	28 – 22
98980–06008	12 – 4
	12 – 11
99009–16400	15 – 7
99009–18500	17 – 25
99009–20400	15 – 16
99009–22500	14 – 26
99009–45500	32 – 7
99530–08016	14 – 9
99530–12016	14 – 28
99530–14016	1 – 27
	13 – 6
9Y58F–39113	32 – 29

PART NO.	REF. NO.

PART NO.	REF. NO.